DX³ MCBs

MCBs for AC applications till 63 A

N

4085 90

4086 14

4086 37

4086 55

4086 77

4086 94

Technical characteristics **p. 32-45**

10 kA ISI marked as per IS/IEC 60898-1 2002
Integrated label holder
Sliding bottom clamp
Improved air channels
Color coded On/Off indication on dolly
Biconnect lower terminals
IP 20 protected terminals
Sliding shutters
DC-80 V per pole - 1 kA

Pack	Cat.Nos	DX³ MCBs - C curve	
		Single pole 240/415 V~	
		Nominal rating In (A)	Number of modules
1/10/120	4085 80	0.5	1
1/10/120	4085 81	1	1
1/10/120	4085 83	2	1
1/10/120	4085 84	3	1
1/10/120	4085 85	4	1
1/10/120	**4085 87**	6	1
1/10/120	**4085 90**	10	1
1/10/120	**4085 92**	16	1
1/10/120	**4085 93**	20	1
1/10/120	**4085 94**	25	1
1/10/120	**4085 95**	32	1
1/10/120	4085 96	40	1
1/10/120	4085 97	50	1
1/10/120	4085 98	63	1
		Single pole + Neutral 230 V~	
1/5/60	4086 02	0.5	2
1/5/60	4086 03	1	2
1/5/60	4086 05	2	2
1/5/60	4086 06	3	2
1/5/60	4086 07	4	2
1/5/60	4086 09	6	2
1/5/60	4086 12	10	2
1/5/60	**4086 14**	16	2
1/5/60	**4086 15**	20	2
1/5/60	4086 16	25	2
1/5/60	**4086 17**	32	2
1/5/60	4086 18	40	2
1/5/60	4086 19	50	2
1/5/60	4086 20	63	2
		2 pole 415 V~	
1/40	4086 21	0.5	2
1/40	4086 22	1	2
1/40	4086 24	2	2
1/40	4086 25	3	2
1/40	4086 26	4	2
1/40	**4086 28**	6	2
1/40	**4086 31**	10	2
1/40	**4086 33**	16	2
1/40	**4086 34**	20	2
1/40	**4086 35**	25	2
1/40	**4086 36**	32	2
1/40	4086 37	40	2
1/40	4086 38	50	2
1/40	4086 39	63	2

Pack	Cat.Nos	DX³ MCBs - C curve	
		3 pole 415 V~	
		Nominal rating In (A)	Number of modules
1/32	4086 43	0.5	3
1/32	4086 44	1	3
1/32	4086 46	2	3
1/32	4086 47	3	3
1/32	4086 48	4	3
1/32	**4086 50**	6	3
1/32	**4086 53**	10	3
1/32	**4086 55**	16	3
1/32	**4086 56**	20	3
1/32	**4086 57**	25	3
1/32	**4086 58**	32	3
1/32	4086 59	40	3
1/32	4086 60	50	3
1/32	4086 61	63	3
		3 pole + Neutral 415 V~	
1/32	4086 65	0.5	4
1/32	4086 66	1	4
1/32	4086 68	2	4
1/32	4086 69	3	4
1/32	4086 70	4	4
1/32	4086 72	6	4
1/32	4086 75	10	4
1/32	4086 77	16	4
1/32	4086 78	20	4
1/32	4086 79	25	4
1/32	**4086 80**	32	4
1/32	**4086 81**	40	4
1/32	4086 82	50	4
1/32	**4086 83**	63	4
		4 pole 415 V~	
1/32	4086 84	0.5	4
1/32	4086 85	1	4
1/32	4086 87	2	4
1/32	4086 88	3	4
1/32	4086 89	4	4
1/32	4086 91	6	4
1/32	4086 94	10	4
1/32	4086 96	16	4
1/32	4086 97	20	4
1/32	4086 98	25	4
1/32	**4086 99**	32	4
1/32	**4087 00**	40	4
1/32	4087 01	50	4
1/32	**4087 02**	63	4

Technical data

Specifications	IS/IEC 60898-1 2002	
Number of poles	SP, SPN, DP, TP, TPN, FP	
Characteristics	C & D Curve	
Breaking capacity	10 kA 0.5 A to 63 A as per IS/IEC 60898-1 2002 16 kA for 0.5 A to 25 A as per IEC 60947-2	
Rated voltage	230 V/400 V	
Current limitation class	Class 3	
Frequency	50 Hz/60 Hz	
Minimum operating voltage	12 V AC/DC	
Enclosures	Polyester self extinguishing, heat and fire resistant according to IEC 60898-1, glow-wire test at 960 °C for external parts made of insulating material necessary to retain in position current-carrying parts and parts of protective circuit (650 °C for all other external parts made of insulating material)	
Mounting position	Vertical / Horizontal / Upside down / On the side	
Fixing	On symmetric rail EN/IEC 60715 or DIN 35	
Maximum cable size	Top/Bottom Rigid cable	1 x 1.5 mm² to 35 mm² 2 x 1.5 mm² to 16 mm²
	Top/Bottom Flexible cable	1 x 1.5 mm² to 25 mm² 2 x 1.5 mm² to 10 mm²
Applied connection torque	Recommended : 2.5 Nm Minimum : 2 Nm Maximum: 3 Nm	
Mechanical endurance	20000 operations without load	
Electrical endurance	10000 operations with load (under In*cos = 0.9) 2000 operations under In, DC current	
Permissible ambient temperature	0.5 to 63 A - Maximum + 70 °C Minimum -25 °C	

Specifications	IEC 60947-2	
Number of poles	SP, DP, TP, FP	
Breaking capacity	10 kA 80 A to 125 A as per IEC 60898 16 kA for 80 A to 125 A as per IEC 60947-2	
Rated voltage	230 V/400 V	
Current limitation class	Class 3	
Frequency	50 Hz/60 Hz	
Minimum operating voltage	12 V AC/DC	
Enclosures	Polyester self extinguishing, heat and fire resistant according to IEC 60898-1, glow-wire test at 960°C for external parts made of insulating material necessary to retain in position current-carrying parts and parts of protective circuit (650°C for all other external parts made of insulating material)	
Mounting position	Vertical / Horizontal / Upside down / On the side	
Fixing	On symmetric rail EN/IEC 60715 or DIN 35	
Maximum cable size	Top/Bottom Rigid cable	1 x 1.5 mm² to 50 mm² 2 x 1.5 mm² to 25 mm²
	Top/Bottom Flexible cable	1 x 1.5 mm² to 35 mm² 2 x 1.5 mm² to 20 mm²
Applied connection torque	Recommended : 2.5 Nm Minimum : 2 Nm Maximum: 3 Nm	
Mechanical endurance	20000 operations without load	
Electrical endurance	10000 operations with load (under In*cos = 0.9) 2000 operations under In, DC current	
Permissible ambient temperature	80 to 125 A - Maximum + 70 °C Minimum -25 °C	

Power dissipated in Watt per pole at In

Circuit breakers C and D curves

In (A)	0,5	1	1,6	2	3	4	5	6	7,5	10	16	20	25	32	40	50	63
1P ÷ 4P	**1.7**	**2**	**2**	**2**	**2**	**2**	**2.1**	**1.1**	**1.4**	**1.8**	**2**	**2.2**	**2.7**	**3.2**	**4**	**4.5**	**5.5**
Permitted limit as per IEC 60898	3	3	3	3	3	3	3	3	3.5	4.5	4.5	6	7.5	9	13		

Impedance per pole (Ω) = $\frac{\text{P dissipated}}{\text{In}^2}$

	Ambient Temperature / In									
In (A)	- 25 °C	- 10 °C	0 °C	10 °C	20 °C	30 °C	40 °C	50 °C	60 °C	70 °C
0,5	0.62	0.6	0.57	0.55	0.52	0.5	0.47	0.42	0.40	0.38
1	1.5	1.4	1.3	1.2	1.1	1	0.9	0.8	0.7	0.6
2	2.8	2.6	2.5	2.3	2.2	2	2	1.9	1.8	1.7
3	3.8	3.6	3.5	3.3	3.2	3.0	2.9	2.8	2.7	2.6
4	4.5	4.2	4.0	3.9	3.7	3.5	3.4	3.3	3.2	3.1
5	6.4	6.0	5.8	5.5	5.3	5.0	4.8	4.7	4.5	4.6
6	7.5	7.0	6.6	6.4	6.2	6.0	5.8	5.6	5.4	5.3
10	12.5	11.5	11.1	10.7	10.3	10.0	9.7	9.3	9.0	8.7
16	20.0	18.7	18.0	17.3	16.6	16.0	15.4	14.7	14.1	13.5
20	25.0	23.2	22.4	21.6	20.8	20.0	19.2	18.4	17.6	16.8
25	31.5	29.5	28.3	27.2	26.0	25.0	24.0	22.7	21.7	20.7
32	41.0	37.8	36.5	34.9	33.3	32.0	30.7	29.1	27.8	26.5
40	51.0	48.0	46.0	44.0	42.0	40.0	38.0	36.0	34.0	32.0
50	64.0	60.0	57.5	55.0	52.5	50.0	47.5	45.0	42.5	40.0
63	80.6	75.6	72.5	69.9	66.1	63.0	59.8	56.1	52.9	49.7

Choice of DX³ MCBs for capacitor banks

This table shows the rated current of MCBs to be used when controlling capacitor banks so as to guarantee its function and shortcircuit protection.
Overload protection is not necessary since these installations cannot be overloaded.
This data refers to shortcircuit protection in absence of harmonics or heavy transitory currents.

	DX³ MCB rating in amps			
	C characteristic		D characteristic	
Power of capacitor bank in KVAR	**Single phase 240 V**	**Three phase 415 V**	**Single phase 240 V**	**Three phase 415 V**
0.5	10	6	3	1
1	20	6	6	2
1.5	32	10	10	3
2.5	40	16	10	4
3	50	16	16	4
3.5	63	20	16	6
4	63	25	16	6
4.5	...	25	20	10
5	...	32	20	10
5.5	...	32	25	10
6	...	32	25	10
6.5	...	40	25	10
7	...	40	32	10
7.5	...	50	32	16
8	...	50	32	16
8.5	...	50	40	16
9	...	50	40	16
9.5	...	63	40	16
10		63	40	16
10.5	80	63	60	16
11	80		50	16
11.5	80		50	16
12	80		50	20
12.5	80		50	20
13	100	...	63	20
13.5	100	...	63	20
14	100	...	63	20
14.5	100	...	63	25
15	100	...	63	25
15.5	100	...		25
16	100	...		25
16.5	125	...	...	25
17	125	...	...	25
17.5	125	...	...	25
18	125	...	...	32
18.5	125	...	...	32
19	125	...	...	32
19.5	125	...	...	32
20	125	...	...	32
20.5	...	...	...	32
21	...	...	...	32
21.5	...	...	...	32
22	...	...	...	32
22.5	...	...	...	32
23	...	...	...	32
23.5	...	...	...	40
24	...	...	...	40
24.5	...	...	...	40
25	...	...	...	40
25.5	...	...	...	40
26	...	...	...	40
26.5	...	...	...	40
27	...	...	...	40
27.5	...	...	...	40
28	...	...	...	40
28.5	...	...	...	40
29	...	...	...	50
29.5	...	...	...	50
30	...	...	...	50
30.5	...	80	...	50
31	...	80	...	50
31.5	...	80	...	50
32	...	80	...	50
32.5	...	80	...	50
33	...	80	...	50
33.5	...	80	...	50
34	...	80	...	50
34.5	...	80	...	50
35	...	80	...	50
35.5	...	80	...	50
36	...	80	...	50
36.5	...	80	...	63
37	...	80	...	63
37.5	...	80	...	63
38	...	80	...	63
38.5	...	80	...	63
39	...	100	...	63
39.5	...	100	...	63
40	...	100	...	63
40.5	...	100	...	63
41	...	100	...	63
41.5	...	100	...	63
42	...	100	...	63
42.5	...	100	...	63
43	...	100	...	63
43.5	...	100	...	63
44	...	100	...	63
44.5	...	100	...	63
45	...	100	...	63
45.5 to 48	...	100	...	...
48.5 to 60	...	125	...	...

Technical data

Correct polarity connections for DC MCBs

• Supply terminals

When supply is given at lower terminals

Single pole MCB

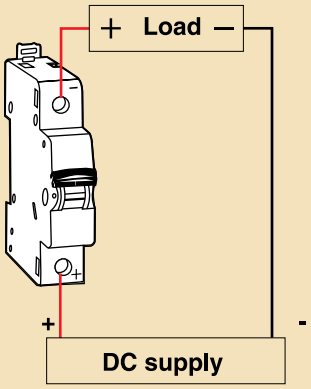

Double pole MCB

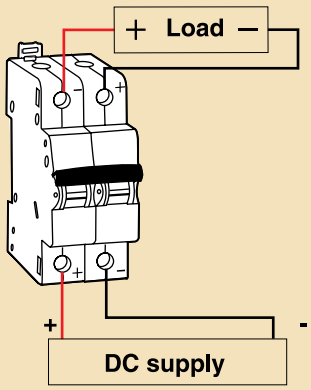

• Supply terminals

When supply is given at upper terminals

Single pole MCB

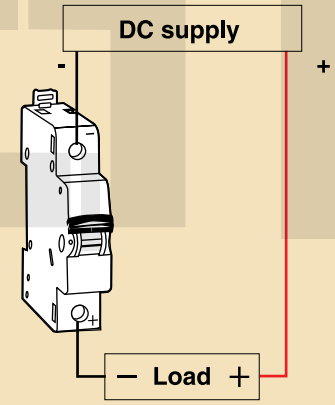

Double pole MCB

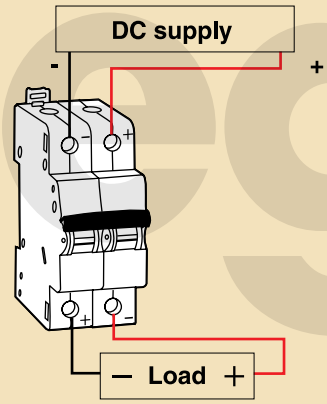

Derating of MCB for use with fluorescent lights

Ferromagnetic and electronic ballasts have a high inrush current for a short time. These currents can cause the tripping of circuit breakers. At the time of the installation, it should take into account the maximum number of ballasts per circuit breaker that the manufacturers of lamps and ballasts indicate in their catalogues.

Influence of the altitude

	≤2000 m	3000 m	4000 m	5000 m
Dielectric holding	3000 V	2500 V	2000 V	1500 V
Max operational voltage	400 V	400 V	400 V	400 V
Derating at 30 °C	none	none	none	none

Derating of MCBs function of the number of devices side by side:

When several MCBs are juxtaposed and operate simultaneously, the thermal evacuation of the poles is limited. This results in an increase in operating temperature of the circuit breakers which can cause unwanted tripping. It is recommended to apply the following coefficients to the rated currents.

Influence of the altitude

Number of circuit breakers side by side	Coefficient
2 - 3	0.9
4 - 5	0.8
6 - 9	0.7
≥10	0.6

These values are given by the recommendation of IEC 60439-1, NF C 63421 and EN 60439-1 standards.

Tripping characteristics

Standards has established different tripping characteristics depending on minimum and maximum values of magnetic trip.

DX³ MCB	Type	Im1	Im2	Typical application
0.5 A to 63 A	D	10 In	20 In	Protection of cable and appliance which has very high starting currents.
6 A to 63 A	C	5 In	10 In	Protection of cable used for lighting load, power load and induction loads with high starting current.

Im1 - hold limit
Im2 - Trip limit

DX³ MCBs versus zero point extinguishing MCBs

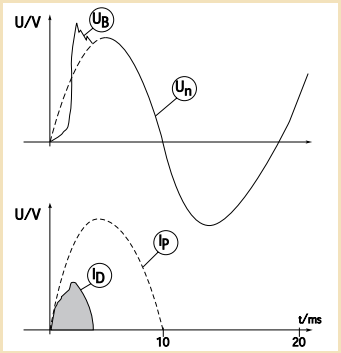

Current limiting DX ³ MCB

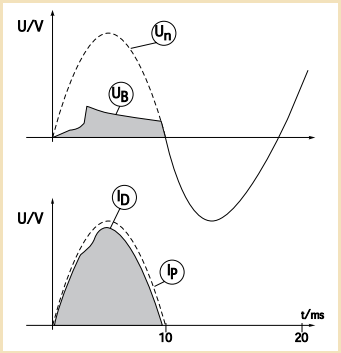

Zero point extinguishing MCB

Un = Mains Voltage
UB = Arc Voltage
ID = Let-through short circuit current
IP = Prospective short circuit current

Technical data

Association of protection devices

Association is the technique by which the breaking capacity of a MCB is increased by coordinating it with another protection device, placed upstream. This coordination makes it possible to use a protection device with a breaking capacity which is lower than the maximum prospective short-circuit current at its installation point

The breaking capacity of a protection device must be at least equal to the maximum short-circuit which may occur at the point at which this device is installed.

In exceptional cases, the breaking capacity may be lower than the maximum prospective short-circuit, as long as:

- is associated with a device upstream which has the necessary breaking capacity at its own installation point
- The downstream device and the trunking being protected can withstand the power limited by the association of the devices.

Association therefore leads to substantial savings.

The association values given in the tables on the following pages are based on laboratory tests carried out in accordance with IEC 60947-2.

Note: In the case of single phase circuits (protected by P+N or 2P MCBs) in a 415 V AC supply, supplied upstream by a 3-phase circuit, it is advisable to use the association tables for 230 V.

Example of association

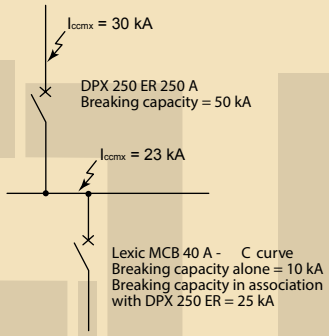

3-level association

An association may be created on three levels if one of the conditions below is met.

- The upstream device A must have an adequate breaking capacity at its installation point. Devices B and C are associated with device A. Simply check that the association values B + A and C + A have the necessary breaking capacity.
In this case, there is no need to check the association between devices B and C.

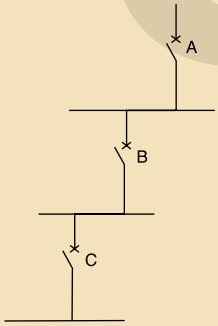

- The association is made between successive devices: Upstream device A, which has an adequate breaking capacity at its installation point, device C is associated with device B which is in turn associated with device A.

Simply check that the association values C+B and B+A have the necessary breaking capacity. In this case, there is no need to check the association between devices A and C.

Association in IT connection systems

The values given in the tables should only be used for TN and TT systems.

Although this practice is not widely used, these values may also be used for installations with IT systems. It is therefore advisable to check that each protection device, on its own, can break, on a single pole, the maximum double fault current at the point in question.

Association between distribution boards

Association applies to devices installed in the same distribution board as well as in different boards. It is therefore generally possible to benefit from the advantages of the association between devices located, for example, in a main distribution board and in a secondary board.

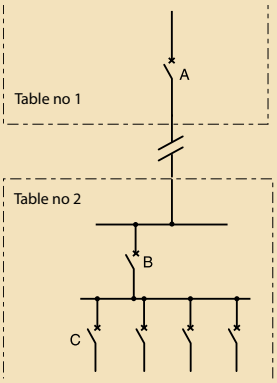

MCB - switch association

The switches must be systematically protected by an MCB placed upstream. There is considered to be protection against overloads if the rating of switch I is at least equal to that of the upstream MCB, D. If this is not the case, the thermal stresses (devices and conductors) must be checked.
The tables on the following pages give the breaking capacity limits of the MCB - switch associations.

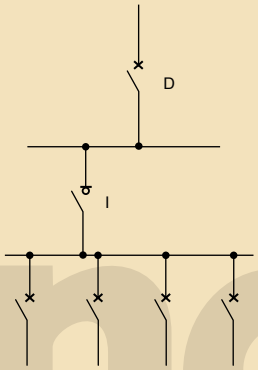

Discrimination of protection devices

Discrimination is a technique which consists of coordinating the protection in such a way that a fault on one circuit only trips the protection placed at the head of that circuit, thus avoiding rendering the remainder of the installation inoperative. Discrimination improves continuity of service and safety of the installation

Discrimination rules are set by the regulations concerning public buildings and for safety installations in general.

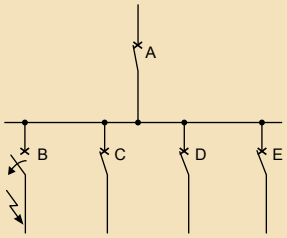

Discrimination between A and B is said to be "total" if it is provided up to the value of the maximum prospective short-circuit at the point at which B is installed.

By extension, in the tables on the following pages, total discrimination, indicated by T, means that there is discrimination up to the breaking capacity of device B.

Discrimination between A and B is said to be "partial" in the other cases.

The discrimination limit (given in the following tables) is therefore defined. This gives the short-circuit current value below which only MCB B will open and above which MCB A will also open.

There are a number of techniques for providing discrimination:

- Current discrimination, used for terminal circuits which have low short-circuits.
- Time discrimination, provided by a delay on tripping the upstream MCB
- Logical discrimination, a variant of time discrimination, used on electronic MCBs via a special link between the devices.

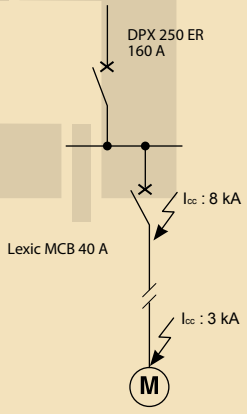

Since almost all faults occur during use, partial discrimination may be adequate if the discrimination limit is higher than the value of the maximum short-circuit which may occur at the point of use (or at the end of the trunking). This is referred to as "operating discrimination". This technique is very often adequate, more economical and less restricting in terms of implementation.

The discrimination limit for the association DPX 250 ER (160 A) with Lexic MCB 40 A (C curve) is 6 kA. Since the prospective ISC at the point of installation is 8 kA, the discrimination is not total. However, there is discrimination at the point of use at which the prospective short-circuit is only 3 kA.

Current discrimination

This technique is based on the off set of the intensity of the tripping curves of the upstream and downstream MCBs. It is checked by comparing these curves and checking that they do not overlap. It applies for the overload zone and the short-circuit zone, and the further apart the ratings of the devices, the better the discrimination.

- On overloads

To have discrimination in the overload zone, the ratio of the setting currents (Ir) must be at least 2.

- On short-circuits

To have discrimination in the short circuit zone, the ratio of the magnetic setting currents (Im) must be at least 1.5.

The discrimination limit is then equal to the magnetic release current ImA of the upstream MCB. The discrimination is then total as long as IscB is less than ImA.

Current discrimination is therefore very suitable for terminal circuits where the short-circuits are relatively weak.

In other cases, time discrimination may be used together with current discrimination.

Current discrimination

The discrimination is total for Isc $_{B}$

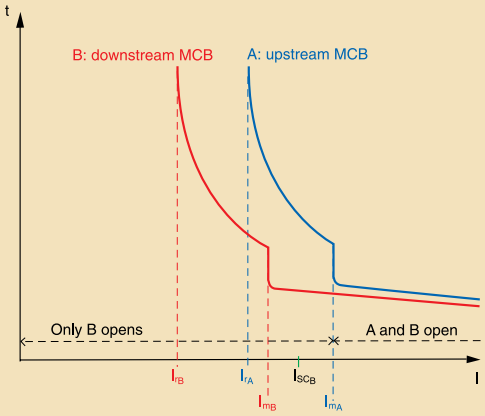

I_{SCB} : maximum short-circuit at the point at which MCB B is installed

When the downstream MCB B is a limiting device, the short-circuit current is limited in terms of time and amplitude. The discrimination is therefore total if the limited current IscB, which device B allows to pass, is lower than the tripping current of device A

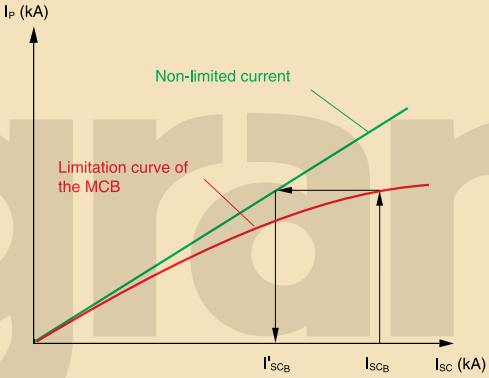

I_{SCB} : prospective short-circuit at the point at which the device is installed
I'_{SCB} : short-circuit limited by device B

Time discrimination

This technique is based on the offset of the times of the tripping curves of the MCBs in series. It is checked by comparing the curves and is used for discrimination in the short-circuit zone. It is also used in addition to current discrimination in order to obtain discrimination beyond the magnetic setting current of the upstream MCB (ImA).

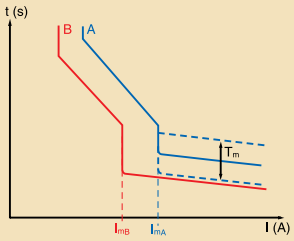

The following is necessary:

- It must be possible to set a time delay on the upstream MCB
- The upstream MCB must be able to withstand the short-circuit current and its effects for the whole period of the time delay
- The trunking through which this current passes must be able to withstand the thermal stresses (I^2t).

The non-tripping time of the upstream device must be longer than the breaking time (including any time delay) of the downstream device.

DPX MCBs have a number of time delay setting positions for creating discrimination with a number of stages.

Technical data

Coordination between modular circuit-breakers and fuses, three-phase network (+ neutal) 400 / 415 V± according to standard IEC/EN 60947-2:

For TT or TN neutral system in 240/415 V network, to know the breaking capacity of the combination of a double pole breaker (connected between phase and neutral under 230 V) downstream of a triple-pole circuit-breaker, take the values shown in Tables 230/400 V.

		Fuse upstream gG Type									
MCB downstream		≤20 A	25 A	32 A	40 A	50 A	63 A	80 A	100 A	125 A	160 A
DX³ 10000 A/10 kA C and D curves	≤6 A	100 kA	100 kA	100 kA	100 kA	100 kA	100 kA	100 kA	100 kA	100 kA	40 kA
	10 A	100 kA	100 kA	100 kA	100 kA	100 kA	100 kA	100 kA	100 kA	100 kA	40 kA
	16 A	-	100 kA	100 kA	100 kA	100 kA	100 kA	100 kA	100 kA	100 kA	40 kA
	20 A	-	-	100 kA	100 kA	100 kA	100 kA	100 kA	100 kA	100 kA	40 kA
	25 A	-	-	-	100k A	100 kA	100 kA	100 kA	100 kA	100 kA	40 kA
	32 A	-	-	-	-	100 kA	100 kA	100 kA	100 kA	100 kA	40 kA
	40 A	-	-	-	-	-	100 kA	100 kA	100 kA	100 kA	40 kA
	50 A	-	-	-	-	-	-	100 kA	100 kA	100 kA	40 kA
	63 A	-	-	-	-	-	-	100 kA	100 kA	100 kA	40 kA

		Fuse upstream aM Type									
MCB downstream		≤20 A	25 A	32 A	40 A	50 A	63 A	80 A	100 A	125 A	160 A
DX³ 10000 A/10 kA C and D curves	≤6 A	100 kA	100 kA	100 kA	100 kA	100 kA	100 kA	100 kA	100 kA	100 kA	40 kA
	10 A	100 kA	100 kA	100 kA	100 kA	100 kA	100 kA	100 kA	100 kA	100 kA	40 kA
	16 A	-	100 kA	100 kA	100 kA	100 kA	100 kA	100 kA	100 kA	100 kA	40 kA
	20 A	-	-	100 kA	100 kA	100 kA	100 kA	100 kA	100 kA	100 kA	40 kA
	25 A	-	-	-	100 kA	100 kA	100 kA	100 kA	100 kA	100 kA	40 kA
	32 A	-	-	-	-	100 kA	100 kA	100 kA	100 kA	100 kA	40 kA
	40 A	-	-	-	-	-	100 kA	100 kA	100 kA	100 kA	40 kA
	50 A	-	-	-	-	-	-	100 kA	100 kA	100 kA	40 kA
	63 A	-	-	-	-	-	-	100 kA	100 kA	100 kA	40 kA

All these values are also valid for circuit breakers associated to differential blocks.
According to the curves and ratings of circuit breakers, attention to the threshold and size of upstream fuse which must necessarily be higher.

Coordination between modular circuit-breakers, three-phase network (+ neutal) 400 / 415 V± according to IEC/EN 60947-2:

For TT or TN neutral system in 230/400 V network, to know the breaking capacity of the combination of a double pole breaker (connected between phase and neutral under 230 V) downstream of a triple-pole circuit-breaker, take the values shown in Tables 230/400 V.

		MCB upstream DX³ 10000/16 kA C and D Curves							
MCB downstream		≤25 A	32 A	40 A	50 A	63 A	80 A	100 A	125 A
DX³ 10000 A C Curves	≤6 A	16 kA	16 kA	16 A	16 kA	16 kA	16 kA	16 kA	16 kA
	10 A	16 kA	16 kA	16 kA	16 kA	16 kA	16 kA	16 kA	16 kA
	16 A	16 kA	16 kA	16 kA	16 kA	16 kA	16 kA	16 kA	16 kA
	20 A	16 kA	16 kA	16 kA	16 kA	16 kA	16 kA	16 kA	16 kA
	25 A	-	16 kA	16 kA	16 kA	16 kA	16 kA	16 kA	16 kA
	32 A	-	-	16 kA	16 kA	16 kA	16 kA	16 kA	16 kA
	40 A	-	-	-	16 kA	16 kA	16 kA	16 kA	16 kA
	50 A	-	-	-	-	16 kA	16 kA	16 kA	16 kA
	63 A	-	-	-	-	-	16 kA	16 kA	16 kA

		m.c.b. upstream DX³ 25 kA C and D Curves							
MCB downstream		≤25 A	32 A	40 A	50 A	63 A	80 A	100 A	125 A
DX³ 10000 A C Curves	≤6 A	25 kA	25 kA	25 kA	25 kA	25 kA	25 kA	25 kA	25 kA
	10 A	25 kA	25 kA	25 kA	25 kA	25 kA	25 kA	25 kA	25 kA
	16 A	25 kA	25 kA	25 kA	25 kA	25 kA	25 kA	25 kA	25 kA
	20 A	25 kA	25 kA	25 kA	25 kA	25 kA	25 kA	25 kA	25 kA
	25 A	-	25 kA	25 kA	25 kA	25 kA	25 kA	25 kA	25 kA
	32 A	-	-	25 kA	25 kA	25 kA	25 kA	25 kA	25 kA
	40 A	-	-	-	25 kA	25 kA	25 kA	25 kA	25 kA
	50 A	-	-	-	-	25 kA	25 kA	25 kA	25 kA
	63 A	-	-	-	-	-	25 kA	25 kA	25 kA

All these values are also valid for circuit breakers associated to RCD add-on modules.
According to the curves and ratings of circuit breakers, attention to the magnetic threshold and to the size of upstream circuit breakers which must necessarily be higher.

Technical data

Coordination between modular circuit-breakers, three-phase network (+ neutal) 400 / 415 V± according to IEC/EN 60947-2:

For TT or TN neutral system in 240/415 V network, to know the breaking capacity of the combination of a double pole breaker (connected between phase and neutral under 230 V) downstream of a triple-pole circuit-breaker, take the values shown in Tables 240/415 V.

		MCB upstream										
		DX³ 36 kA						DX³ 50 kA				
		C Curve						C and D Curves				
MCB downstream		≤25 A	32 A	40 A	50 A	63 A	80 A	≤25 A	32 A	40 A	50 A	63 A
DX³ 10000 A C Curves	≤6 A	36 kA	36 kA	36 kA	36 kA	36 kA	36 kA	50 kA	50 kA	50 kA	50 kA	50 kA
	10 A	36 kA	36 kA	36 kA	36 kA	36 kA	36 kA	50 kA	50 kA	50 kA	50 kA	50 kA
	16 A	36 kA	36 kA	36 kA	36 kA	36 kA	36 kA	50 kA	50 kA	50 kA	50 kA	50 kA
	20 A	36 kA	36 kA	36 kA	36 kA	36 kA	36 kA	50 kA	50 kA	50 kA	50 kA	50 kA
	25 A	-	36 kA	36 kA	36 kA	36 kA	36 kA	-	50 kA	50 kA	50 kA	50 kA
	32 A	-	-	36 kA	36 kA	36 kA	36 kA	-	-	50 kA	50 kA	50 kA
	40 A	-	-	-	36 kA	36 kA	36 kA	-	-	-	50 kA	50 kA
	50 A	-	-	-	-	36 kA	36 kA	-	-	-	-	50 kA
	63 A	-	-	-	-	-	36 kA	-	-	-	-	-

All these values are also valid for circuit breakers associated to RCD add-on modules.
According to the curves and ratings of circuit breakers, attention to the magnetic threshold and to the size of upstream circuit breakers which must necessarily be higher.

Coordination between Modular Circuit-Breakers (MCB) and Moulded Case Circuit Breakers (MCCBs), three-phase network (+ neutal) 400 / 415 V± according to standard IEC/EN60947-2:

For TT or TN neutral system in 240/415 V network, to know the breaking capacity of the combination of a double pole breaker (connected between phase and neutral under 230 V) downstream of a triple-pole circuit-breaker, take the values shown in Tables 240/415 V.

		MCCB upstream							
		DPX³ 160 / DPX³ 160 + RCD							
		16 kA							
MCB downstream		16 A	25 A	40 A	63 A	80 A	100 A	125 A	160 A
DX³ 10000 A/10 kA C and D curves	≤6 A	16 kA	16 kA	16 kA	16 kA	16 kA	16 kA	16 kA	16 kA
	10 A	16 kA	16 kA	16 kA	16 kA	16 kA	16 kA	16 kA	16 kA
	16 A	-	16 kA	16 kA	16 kA	16 kA	16 kA	16 kA	16 kA
	20 A	-	16 kA	16 kA	16 kA	16 kA	16 kA	16 kA	16 kA
	25 A	-	-	16 kA	16 kA	16 kA	16 kA	16 kA	16 kA
	32 A	-	-	16 kA	16 kA	16 kA	16 kA	16 kA	16 kA
	40 A	-	-	-	16 kA	16 kA	16 kA	16 kA	16 kA
	50 A	-	-	-	16 kA	16 kA	16 kA	16 kA	16 kA
	63 A	-	-	-	-	16 kA	16 kA	16 kA	16 kA

		MCCB upstream							
		DPX³ 160 / DPX3 160 + RCD							
		25 - 36 - 50 kA							
MCB downstream		16 A	25 A	40 A	63 A	80 A	100 A	125 A	160 A
DX³ 10000 A/10 kA C and D curves	≤6 A	25 kA	25 kA	25 kA	25 kA	25 kA	25 kA	25 kA	25 kA
	10 A	25 kA	25 kA	25 kA	25 kA	25 kA	25 kA	25 kA	25 kA
	16 A	-	25 kA	25 kA	25 kA	25 kA	25 kA	25 kA	25 kA
	20 A	-	25 kA	25 kA	25 kA	25 kA	25 kA	25 kA	36 kA
	25 A	-	-	25 kA	25 kA	25 kA	25 kA	25 kA	25 kA
	32 A	-	-	25 kA	25 kA	25 kA	25 kA	25 kA	25 kA
	40 A	-	-	-	25 kA	25 kA	25 kA	25 kA	25 kA
	50 A	-	-	-	25 kA	25 kA	25 kA	25 kA	25 kA
	63 A	-	-	-	-	25 kA	25 kA	25 kA	25 kA

All these values are also valid for circuit breakers associated to differential blocks.
According to the curves and ratings of circuit breakers, attention to the magnetic threshold and to the size of upstream circuit breakers which must necessarily be higher.

Technical data

Coordination between Modular Circuit-Breakers (MCB) and Moulded Case Circuit Breakers (MCCBs), three-phase network (+ neutal) 400 / 415 V± according to standard IEC/EN60947-2:

For TT or TN neutral system in 240/415 V network, to know the breaking capacity of the combination of a double pole breaker (connected between phase and neutral under 230 V) downstream of a triple-pole circuit-breaker, take the values shown in Tables 240/415 V.

		MCCB upstream			
		DPX³ 250 / DPX³ 250 + RCD (Thermal - Magnetic & Electronic)			
		25 - 36 - 50 kA - 70 kA			
MCB downstream		100 A	160 A	200 A	250 A
DX³ 10000 A/10 kA C and D curves	≤6 A	25 kA	25 kA	25 kA	25 kA
	10 A	25 kA	25 kA	25 kA	25 kA
	16 A	25 kA	25 kA	25 kA	25 kA
	20 A	25 kA	25 kA	25 kA	25 kA
	25 A	25 kA	25 kA	25 kA	25 kA
	32 A	25 kA	25 kA	25 kA	25 kA
	40 A	25 kA	25 kA	25 kA	25 kA
	50 A	25 kA	25 kA	25 kA	25 kA
	63 A	25 kA	25 kA	25 kA	25 kA

		MCCB upstream												
		DPX / H / L 250 (Thermal -Magnetic & electronic)						DPX 400 AB		DPX / DPXH / DPXL 630 (Thermal - Magnetic & electronic)				
		36 - 70 - 100 kA						36 kA		36 - 70 - 100 kA				
MCB downstream		25 A	40 A	63 A	100 A	160 A	250 A	320 A	400 A	250 A	320 A	400 A	500 A	630 A
DX³ 10000 A/10 kA C and D curves	≤6 A	25 kA	25 kA	25 kA	25 kA	25 kA	25 kA	25 kA	25 kA	25 kA	25 kA	25 kA	25 kA	25 kA
	10 A	25 kA	25 kA	25 kA	25 kA	25 kA	25 kA	25 kA	25 kA	25 kA	25 kA	25 kA	25 kA	25 kA
	16 A	25 kA	25 kA	25 kA	25 kA	25 kA	25 kA	25 kA	25 kA	25 kA	25 kA	25 kA	25 kA	25 kA
	20 A	25 kA	25 kA	25 kA	25 kA	25 kA	25 kA	25 kA	25 kA	25 kA	25 kA	25 kA	25 kA	25 kA
	25 A	-	25 kA	25 kA	25 kA	25 kA	25 kA	25 kA	25 kA	25 kA	25 kA	25 kA	25 kA	25 kA
	32 A	-	25 kA	25 kA	25 kA	25 kA	25 kA	25 kA	25 kA	25 kA	25 kA	25 kA	25 kA	25 kA
	40 A	-	-	25 kA	25 kA	25 kA	25 kA	20 kA	20 kA	20 kA	20 kA	20 kA	20 kA	20 kA
	50 A	-	-	25 kA	25 kA	25 kA	25 kA	20 kA	20 kA	20 kA	20 kA	20 kA	20 kA	20 kA
	63 A	-	-	-	20 kA	20 kA	20 kA	20 kA	20 kA	20 kA	20 kA	20 kA	20 kA	20 kA

All these values are also valid for circuit breakers associated to differential blocks.
According to the curves and ratings of circuit breakers, attention to the magnetic (or electronic) threshold and to the size of upstream circuit breakers which must necessarily be higher.

Coordination between Modular Circuit-Breakers (MCB) and Moulded Case Circuit Breakers (MCCBs), three-phase network (+ neutal) 400 / 415 V± according to standard IEC/EN60947-2:

For TT or TN neutral system in 240/415 V network, to know the breaking capacity of the combination of a double pole breaker (connected between phase and neutral under 230 V) downstream of a triple-pole circuit-breaker, take the values shown in Tables 240/415 V.

		MCCB upstream	
		DPX / H / L 1250 (Thermo-Magnetic)	DPX / H 1600 (Electronic)
		50 - 70 - 100 kA	36 - 70 kA
MCB downstream		500 to 1250 A	630 to 1600 A
DX³ 10000 A/10 kA C and D curves	≤6 A	25 kA	25 kA
	10 A	25 kA	25 kA
	16 A	25 kA	25 kA
	20 A	25 kA	25 kA
	25 A	20 kA	20 kA
	32 A	16 kA	16 kA
	40 A	16 kA	16 kA
	50 A	16 kA	16 kA
	63 A	16 kA	16 kA

All these values are also valid for circuit breakers associated to differential blocks.
According to the curves and ratings of circuit breakers, attention to the magnetic (or electronic) threshold and to the size of upstream circuit breakers which must necessarily be higher.

Coordination between modular circuit-breakers and fuses, three-phase network (+ neutal) 230/240 V± according to standard IEC/EN 60947-2:

		Fuse upstream									
		gG Type									
MCB downstream		≤20 A	25 A	32 A	40 A	50 A	63 A	80 A	100 A	125 A	160 A
DX³ 10000 A/10 kA C and D curves	≤6 A	100 kA	100 kA	100 kA	100 kA	100 kA	100 kA	100 kA	100 kA	100 kA	40 kA
	10 A	100 kA	100 kA	100 kA	100 kA	100 kA	100 kA	100 kA	100 kA	100 kA	40 kA
	16 A	-	100 kA	100 kA	100 kA	100 kA	100 kA	100 kA	100 kA	100 kA	40 kA
	20 A	-	-	100 kA	100 kA	100 kA	100 kA	100 kA	100 kA	100 kA	40 kA
	25 A	-	-	-	100 kA	100 kA	100 kA	100 kA	100 kA	100 kA	40 kA
	32 A	-	-	-	-	100 kA	100 kA	100 kA	100 kA	100 kA	40 kA
	40 A	-	-	-	-	-	100 kA	100 kA	100 kA	100 kA	40 kA
	50 A	-	-	-	-	-	-	100 kA	100 kA	100 kA	40 kA
	63 A	-	-	-	-	-	-	100 kA	100 kA	100 kA	40 kA

		Fuse upstream									
		aM Type									
MCB downstream		≤20 A	25 A	32 A	40 A	50 A	63 A	80 A	100 A	125 A	160 A
DX³ 10000 A/10 kA C and D curves	≤6 A	100 kA	100 kA	100 kA	100 kA	100 kA	100 kA	100 kA	100 kA	100 kA	40 kA
	10 A	100 kA	100 kA	100 kA	100 kA	100 kA	100 kA	100 kA	100 kA	100 kA	40 kA
	16 A	-	100 kA	100 kA	100 kA	100 kA	100 kA	100 kA	100 kA	100 kA	40 kA
	20 A	-	-	100 kA	100 kA	100 kA	100 kA	100 kA	100 kA	100 kA	40 kA
	25 A	-	-	-	100 kA	100 kA	100 kA	100 kA	100 kA	100 kA	40 kA
	32 A	-	-	-	-	100 kA	100 kA	100 kA	100 kA	100 kA	40 kA
	40 A	-	-	-	-	-	100 kA	100 kA	100 kA	100 kA	40 kA
	50 A	-	-	-	-	-	-	100 kA	100 kA	100 kA	40 kA
	63 A	-	-	-	-	-	-	100 kA	100 kA	100 kA	40 kA

All these values are also valid for circuit breakers associated to differential blocks.
According to the curves and ratings of circuit breakers, attention to the threshold and to the size of upstream fuses which must necessarily be higher.

Technical data

Coordination between modular circuit-breakers, three-phase network (+ neutal) 230/240 V± according to IEC/EN 60947-2:

		MCB upstream							
		DX³ 10000/16 kA							
		B, C and D Curves							
MCB downstream		≤25 A	32 A	40 A	50 A	63 A	80 A	100 A	125 A
DX³ 10000 A C Curves	≤6 A	32 kA	32 kA	25 kA	25 kA	25 kA	25 kA	25 kA	25 kA
	10 A	32 kA	32 kA	25 kA	25 kA	25 kA	25 kA	25 kA	25 kA
	16 A	32 kA	32 kA	25 kA	25 kA	25 kA	25 kA	25 kA	25 kA
	20 A	32 kA	32 kA	25 kA	25 kA	25 kA	25 kA	25 kA	25 kA
	25 A	-	32 kA	25 kA	25 kA	25 kA	25 kA	25 kA	25 kA
	32 A	-	-	25 kA	25 kA	25 kA	25 kA	25 kA	25 kA
	40 A	-	-	-	25 kA	25 kA	25 kA	25 kA	25 kA
	50 A	-	-	-	-	25 kA	25 kA	25 kA	25 kA
	63 A	-	-	-	-	-	25 kA	25 kA	25 kA

		MCB upstream							
		DX³ 25 kA							
MCB downstream		≤25 A	32 A	40 A	50 A	63 A	80 A	100 A	125 A
DX³ 10000 A C Curves	≤6 A	50 kA	50 kA	25 kA	25 kA	25 kA	25 kA	25 kA	25 kA
	10 A	50 kA	50 kA	25 kA	25 kA	25 kA	25 kA	25 kA	25 kA
	16 A	50 kA	50 kA	25 kA	25 kA	25 kA	25 kA	25 kA	25 kA
	20 A	50 kA	50 kA	25 kA	25 kA	25 kA	25 kA	25 kA	25 kA
	25 A	-	50 kA	25 kA	25 kA	25 kA	25 kA	25 kA	25 kA
	32 A	-	-	25 kA	25 kA	25 kA	25 kA	25 kA	25 kA
	40 A	-	-	-	25 kA	25 kA	25 kA	25 kA	25 kA
	50 A	-	-	-	-	25 kA	25 kA	25 kA	25 kA
	63 A	-	-	-	-	-	25 kA	25 kA	25 kA

All these values are also valid for circuit breakers associated to RCD add-on modules.
According to the curves and ratings of circuit breakers, attention to the magnetic threshold and to the size of upstream circuit breakers which must necessarily be higher.

Coordination between modular circuit-breakers, three-phase network (+ neutal) 230/240 V± according to IEC/EN 60947-2:

		MCB upstream										
		DX³ 36 kA						DX³ 50 kA				
MCB downstream		≤25 A	32 A	40 A	50 A	63 A	80 A	≤25 A	32 A	40 A	50 A	63 A
DX³ 10000 A C Curves	≤6 A	50 kA	50 kA	50 kA	50 kA	50 kA	50 kA	50 kA	50 kA	50 kA	50 kA	50 kA
	10 A	50 kA	50 kA	50 kA	50 kA	50 kA	50 kA	50 kA	50 kA	50 kA	50 kA	50 kA
	16 A	50 kA	50 kA	50 kA	50 kA	50 kA	50 kA	50 kA	50 kA	50 kA	50 kA	50 kA
	20 A	50 kA	50 kA	50 kA	50 kA	50 kA	50 kA	50 kA	50 kA	50 kA	50 kA	50 kA
	25 A	-	50 kA	50 kA	50 kA	50 kA	50 kA	-	50 kA	50 kA	50 kA	50 kA
	32 A	-	-	50 kA	50 kA	50 kA	50 kA	-	-	50 kA	50 kA	50 kA
	40 A	-	-	-	50 kA	50 kA	50 kA	-	-	-	50 kA	50 kA
	50 A	-	-	-	-	50 kA	50 kA	-	-	-	-	50 kA
	63 A	-	-	-	-	-	50 kA	-	-	-	-	-

All these values are also valid for circuit breakers associated to RCD add-on modules.
According to the curves and ratings of circuit breakers, attention to the magnetic threshold and to the size of upstream circuit breakers which must necessarily be higher.

Coordination between Modular Circuit-Breakers (MCB) and Moulded Case Circuit Breakers (MCCBs), three-phase network (+ neutal) 230/240 V± according to standard IEC/EN 60947-2:

		MCCB upstream							
		DPX³ 160 / DPX³ 160 + RCD							
		16 kA							
MCB downstream		16 A	25 A	40 A	63 A	80 A	100 A	125 A	160 A
DX³ 10000 A/10 kA C and D curves	≤6 A	28 kA	28 kA	28 kA	28 kA	28 kA	28 kA	28 kA	28 kA
	10 A	28 kA	28 kA	28 kA	28 kA	28 kA	28 kA	28 kA	28 kA
	16 A	-	28 kA	28 kA	28 kA	28 kA	28 kA	28 kA	28 kA
	20 A	-	28 kA	28 kA	28 kA	28 kA	28 kA	28 kA	28 kA
	25 A	-	-	28 kA	28 kA	28 kA	28 kA	28 kA	28 kA
	32 A	-	-	28 kA	28 kA	28 kA	28 kA	28 kA	28 kA
	40 A	-	-	-	28 kA	28 kA	28 kA	28 kA	28 kA
	50 A	-	-	-	28 kA	28 kA	28 kA	28 kA	28 kA
	63 A	-	-	-	-	28 kA	28 kA	28 kA	28 kA

All these values are also valid for circuit breakers associated to differential blocks.
According to the curves and ratings of circuit breakers, attention to the magnetic threshold and to the size of upstream circuit breakers which must necessarily be higher.

Technical data

Coordination between Modular Circuit-Breakers (MCB) and Moulded Case Circuit Breakers (MCCBs), three-phase network (+ neutal) 230/240 V± according to standard IEC/EN 60947-2:

		MCCB upstream							
		DPX³ 160 / DPX³ 160 + RCD							
		25 kA							
MCB downstream		16 A	25 A	40 A	63 A	80 A	100 A	125 A	160 A
DX³ 10000 A/10 kA C and D curves	≤6 A	40 kA	40 kA	40 kA	40 kA	40 kA	40 kA	40 kA	40 kA
	10 A	40 kA	40 kA	40 kA	40 kA	40 kA	40 kA	40 kA	40 kA
	16 A	-	40 kA	40 kA	40 kA	40 kA	40 kA	40 kA	40 kA
	20 A	-	40 kA	40 kA	40 kA	40 kA	40 kA	40 kA	40 kA
	25 A	-	-	40 kA	40 kA	40 kA	40 kA	40 kA	40 kA
	32 A	-	-	40 kA	40 kA	40 kA	40 kA	40 kA	40 kA
	40 A	-	-	-	40 kA	40 kA	40 kA	40 kA	40 kA
	50 A	-	-	-	40 kA	40 kA	40 kA	40 kA	40 kA
	63 A	-	-	-	-	40 kA	40 kA	40 kA	40 kA

		MCCB upstream							
		DPX³ 160 / DPX³ 160 + RCD							
		36 - 50 kA							
MCB downstream		16 A	25 A	40 A	63 A	80 A	100 A	125 A	160 A
DX³ 10000 A/10 kA C and D curves	≤6 A	50 kA	50 kA	50 kA	50 kA	50 kA	50 kA	50 kA	50 kA
	10 A	50 kA	50 kA	50 kA	50 kA	50 kA	50 kA	50 kA	50 kA
	16 A	-	50 kA	50 kA	50 kA	50 kA	50 kA	50 kA	50 kA
	20 A	-	50 kA	50 kA	50 kA	50 kA	50 kA	50 kA	50 kA
	25 A	-	-	50 kA	50 kA	50 kA	50 kA	50 kA	50 kA
	32 A	-	-	50 kA	-	50 kA	50 kA	50 kA	50 kA
	40 A	-	-	-	50 kA	50 kA	50 kA	50 kA	50 kA
	50 A				50 kA	50 kA	50 kA	50 kA	50 kA
	63 A					50 kA	50 kA	50 kA	50 kA

All these values are also valid for circuit breakers associated to differential blocks.
According to the curves and ratings of circuit breakers, attention to the magnetic threshold and to the size of upstream circuit breakers which must necessarily be higher.

Coordination between Modular Circuit-Breakers (MCB) and Moulded Case Circuit Breakers (MCCBs), three-phase network (+ neutal) 230/240 V± according to standard IEC/EN 60947-2:

		MCCB upstream			
		DPX³ 250 / DPX³ 250+RCD (Thermal-magnetic & electronic)			
		25 kA			
MCB downstream		100 A	160 A	200 A	250 A
DX³ 10000 A/10 kA C and D curves	≤6 A	40 kA	40 kA	40 kA	40 kA
	10 A	40 kA	40 kA	40 kA	40 kA
	16 A	40 kA	40 kA	40 kA	40 kA
	20 A	40 kA	40 kA	40 kA	40 kA
	25 A	40 kA	40 kA	40 kA	40 kA
	32 A	40 kA	40 kA	40 kA	40 kA
	40 A	40 kA	40 kA	40 kA	40 kA
	50 A	40 kA	40 kA	40 kA	40 kA
	63 A	40 kA	40 kA	40 kA	40 kA

All these values are also valid for circuit breakers associated to differential blocks.

Technical data

Coordination between Modular Circuit-Breakers (MCB) and Moulded Case Circuit Breakers (MCCBs), three phase network (+ neutal) 230/240 V± according to standard IEC/EN 60947-2:

		MCCB upstream									
		DPX³ 250 / DPX³ 250 + RCD (Thermal-magnetic & electronic)				DPX / H / L 250 (Thermal-magnetic & electronic)					
		36 - 50 - 70 kA				36 - 70 - 100 kA					
MCB downstream		100 A	160 A	200 A	250 A	25 A	40 A	63 A	100 A	160 A	250 A
DX³ 10000 A/10 kA C and D curves	≤6 A	50 kA	50 kA	50 kA	50 kA	50 kA	50 kA	50 kA	50 kA	50 kA	50 kA
	10 A	50 kA	50 kA	50 kA	50 kA	50 kA	50 kA	50 kA	50 kA	50 kA	50 kA
	16 A	50 kA	50 kA	50 kA	50 kA	50 kA	50 kA	50 kA	50 kA	50 kA	50 kA
	20 A	50 kA	50 kA	50 kA	50 kA	50 kA	50 kA	50 kA	50 kA	50 kA	50 kA
	25 A	50 kA	50 kA	50 kA	50 kA	-	50 kA	50 kA	50 kA	50 kA	50 kA
	32 A	50 kA	50 kA	50 kA	50 kA	-	50 kA	50 kA	50 kA	50 kA	50 kA
	40 A	50 kA	50 kA	50 kA	50 kA	-	-	50 kA	50 kA	50 kA	50 kA
	50 A	50 kA	50 kA	50 kA	50 kA	-	-	50 kA	50 kA	50 kA	50 kA
	63 A	50 kA	50 kA	50 kA	50 kA	-	-	-	50 kA	50 kA	50 kA

		MCCB upstream						
		DPX 400 AB		DPX / DPXH / DPXL 630MT (Thermal-magnetic & electronic)				
		36 kA		36 - 70 - 100 kA				
MCB downstream		320 A	400 A	250 A	320 A	400 A	500 A	630 A
DX³ 10000 A/10 kA C and D curves	≤6 A	50 kA	50 kA	50 kA	50 kA	50 kA	50 kA	50 kA
	10 A	50 kA	50 kA	50 kA	50 kA	50 kA	50 kA	50 kA
	16 A	50 kA	50 kA	50 kA	50 kA	50 kA	50 kA	50 kA
	20 A	50 kA	50 kA	50 kA	50 kA	50 kA	50 kA	50 kA
	25 A	50 kA	50 kA	50 kA	50 kA	50 kA	50 kA	50 kA
	32 A	50 kA	50 kA	50 kA	50 kA	50 kA	50 kA	50 kA
	40 A	50 kA	50 kA	50 kA	50 kA	50 kA	50 kA	50 kA
	50 A	36 kA	36 kA	36 kA	36 kA	36 kA	36 kA	36 kA
	63 A	36 kA	36 kA	36 kA	36 kA	36 kA	36 kA	36 kA

All these values are also valid for circuit breakers associated to differential blocks.
According to the curves and ratings of circuit breakers, attention to the magnetic (or electronic) threshold and to the size of upstream circuit breakers which must necessarily be higher.

Coordination between Modular Circuit-Breakers(MCB) and Moulded Case Circuit Breakers (MCCBs), three phase network (+ neutal) 230/240 V± according to standard IEC/EN 60947-2:

		MCCB upstream	
		DPX / H / L 1250 (Thermal-magnetic)	DPX / H 1600 (electronic)
		50 - 70 - 100 kA	36 - 70 kA
MCB downstream		500 to 1250 A	630 to 1600 A
DX³ 10000 A/10 kA C and D curves	≤6 A	50 kA	50 kA
	10 A	50 kA	50 kA
	16 A	50 kA	50 kA
	20 A	50 kA	50 kA
	25 A	50 kA	50 kA
	32 A	50 kA	50 kA
	40 A	50 kA	50 kA
	50 A	36 kA	36 kA
	63 A	36 kA	36 kA

All these values are also valid for circuit breakers associated to differential blocks.
According to the curves and ratings of circuit breakers, attention to the magnetic (or electronic) threshold and to the size of upstream circuit breakers which must necessarily be higher.

Selectivity between two levels of protection

- The downstream circuit breaker must always have a magnetic threshold and a rated current lower than those of the upstream protection.
- Selectivity is activated total (T) if there is selectivity up to the value of breaking capacity (according to IEC / EN 60947-2) of the downstream circuit breaker.

Selectivity between modular circuits breakers and fuses:

- Selectivity at 400 V± : values in Ampere.

		Fuse upstream							
		gG Type							
MCB downstream		32 A	40 A	50 A	63 A	80 A	100 A	125 A	160 A
DX³ 10000 A/10 kA C and D curves	≤6 A	1300	1900	2500	4000	4600	11000	T	T
	10 A	-	1600	2200	3200	3600	7000	11000	T
	16 A	-	1400	1800	2600	3000	5600	8000	15000
	20 A	-	1200	1500	2200	2500	4600	6300	10000
	25 A	-	-	1300	2000	2200	4100	5500	9000
	32 A	-	-	1200	1700	1900	3500	4500	8000
	40 A	-	-	-	-	1700	3000	4000	6000
	50 A	-	-	-	-	16000	2600	3500	5000
	63 A	-	-	-	-	-	2400	3300	5000

		Fuse upstream								
		aM Type								
MCB downstream		25 A	32 A	40 A	50 A	63 A	80 A	100 A	125 A	160 A
DX³ 10000 A/10 kA C and D curves	≤6 A	1000	1600	2100	3200	6200	15000	T	T	T
	10 A	-	1100	1700	2500	5000	7800	12000	T	T
	16 A	-	1000	1400	2100	4000	6000	9000	T	T
	20 A	-	-	1300	1800	3400	5100	7000	14000	T
	25 A	-	-	1100	1600	3000	4500	6000	9300	14000
	32 A	-	-	-	1300	2400	3800	5000	7700	9000
	40 A	-	-	-	-	2100	3100	4200	6400	7000
	50 A	-	-	-	-	2000	2900	3700	6000	6000
	63 A	-	-	-	-	-	2800	3500	5500	6000

T = Total discrimination

■ Technical data

Selectivity between modular circuits breakers:

Selectivity limit at 400 V ± : values in Ampere.

		MCB upstream DX³ 25 kA										
MCB downstream		10 A	16 A	20 A	25 A	32 A	40 A	50 A	63 A	80 A	100 A	125 A
DX³ 10000 A/10 kA C and D curves	≤6 A	40	64	80	100	700	1200	1500	3000	4000	T	T
	10 A	-	64	80	100	500	700	1000	1800	3000	5000	T
	16 A	-	-	80	100	300	500	700	1300	2000	3600	5500
	20 A	-	-	-	100	-	400	500	1000	1600	3000	4000
	25 A	-	-	-	-	-	-	500	800	1300	2400	3300
	32 A	-	-	-	-	-	-	500	600	1000	1800	2700
	40 A	-	-	-	-	-	-	-	600	800	1600	2400
	50 A	-	-	-	-	-	-	-	-	800	900	1700
	63 A	-	-	-	-	-	-	-	-	-	900	1200

		MCB upstream DX³ 25 kA										
MCB downstream		10 A	16 A	20 A	25 A	32 A	40 A	50 A	63 A	80 A	100 A	125 A
DX³ 10000 A/10 kA C and D curves	≤6 A	75	120	150	187	700	1200	1500	3000	4000	T	T
	10 A	-	120	150	187	500	700	1000	1800	3000	5000	T
	16 A	-	-	150	187	300	500	700	1300	2000	3600	5500
	20 A	-	-	-	187	300	400	500	1000	1600	3000	4000
	25 A	-	-	-	-	240	400	500	800	1300	2400	3300
	32 A	-	-	-	-	-	300	500	600	1000	1800	2700
	40 A	-	-	-	-	-	-	400	600	800	1600	2400
	50 A	-	-	-	-	-	-	-	500	800	900	1700
	63 A	-	-	-	-	-	-	-	-	650	900	1200

T = Total discrimination

Selectivity between modular circuits breakers:

Selectivity limit at 400 V ± : values in Ampere.

		MCB upstream DX³ 25 kA										
MCB downstream		10 A	16 A	20 A	25 A	32 A	40 A	50 A	63 A	80 A	100 A	125 A
DX³ 10000 A/10 kA C and D curves	≤6 A	120	192	240	500	700	1200	1500	3000	4000	T	T
	10 A	-	192	240	300	500	700	1000	1800	3000	5000	T
	16 A	-	-	240	300	384	500	700	1300	2000	3600	5500
	20 A	-	-	-	300	384	480	600	1000	1600	3000	4000
	25 A	-	-	-	-	384	480	600	800	1300	2400	3300
	32 A	-	-	-	-	-	480	600	756	1100	1450	2700
	40 A	-	-	-	-	-	-	600	756	1000	1250	2400
	50 A	-	-	-	-	-	-	-	756	950	1200	1700
	63 A	-	-	-	-	-	-	-	-	950	1200	1500

		MCB upstream DX³ 36 kA								
MCB downstream		10 A	16 A	20 A	25 A	32 A	40 A	50 A	63 A	80 A
DX³ 10000 A/10 kA C and D curves	≤6 A	75	120	170	500	700	1200	1500	3000	4000
	10 A	-	120	150	210	500	700	1000	1800	3000
	16 A	-	-	150	187	300	500	700	1300	2000
	20 A	-	-	-	187	300	400	500	1000	1600
	25 A	-	-	-	-	240	400	500	800	1300
	32 A	-	-	-	-	-	300	500	600	1000
	40 A	-	-	-	-	-	-	400	600	800
	50 A	-	-	-	-	-	-	-	500	800
	63 A	-	-	-	-	-	-	-	-	650

T = Total discrimination

Technical data

Selectivity between modular circuits breakers:

Selectivity limit at 415 V ± : values in Ampere.

		MCB upstream DX³ 50 kA							
MCB downstream		10 A	16 A	20 A	25 A	32 A	40 A	50 A	63 A
DX³ 10000 A/10 kA C and D curves	≤6 A	-	64	170	500	700	1200	1500	3000
	10 A	-	-	150	210	500	700	1000	1800
	16 A	-	-	-	-	300	500	700	1300
	20 A	-	-	-	-	-	400	500	1000
	25 A	-	-	-	-	-	-	500	800
	32 A	-	-	-	-	-	-	500	600
	40 A	-	-	-	-	-	-	-	600
	50 A	-	-	-	-	-	-	-	-
	63 A	-	-	-	-	-	-	-	-

		MCB upstream DX³ 50 kA							
MCB downstream		10 A	16 A	20 A	25 A	32 A	40 A	50 A	63 A
DX³ 10000 A/10 kA C and D curves	≤6 A	75	120	170	500	700	1200	1500	3000
	10 A	-	120	150	210	500	700	1000	1800
	16 A	-	-	150	187	300	500	700	1300
	20 A	-	-	-	187	300	400	500	1000
	25 A	-	-	-	-	240	400	500	800
	32 A	-	-	-	-	-	300	500	600
	40 A	-	-	-	-	-	-	400	600
	50 A	-	-	-	-	-	-	-	500
	63 A	-	-	-	-	-	-	-	-

Selectivity between modular circuits breakers:

Selectivity limit at 415 V ± : values in Ampere.

		MCB upstream DX³ 50 kA							
MCB downstream		10 A	16 A	20 A	25 A	32 A	40 A	50 A	63 A
DX³ 10000 A/10 kA C and D curves	≤6 A	120	192	240	500	700	1200	1500	3000
	10 A	-	192	240	300	500	700	1000	1800
	16 A	-	-	240	300	384	500	700	1300
	20 A	-	-	-	300	384	480	600	1000
	25 A	-	-	-	-	384	480	600	800
	32 A	-	-	-	-	-	480	600	756
	40 A	-	-	-	-	-	-	600	756
	50 A	-	-	-	-	-	-	-	756
	63 A	-	-	-	-	-	-	-	

Selectivity between modular circuits breakers (MCB) and Moulded Case Circuit Breakers (MCCBs):

Selectivity limit at 415 V ± : values in Ampere.

		MCCB upstream DPX³ 160 DPX³ 160 + RCD 16 - 25 - 36 - 50 kA							
MCB downstream		16 A	25 A	40 A	63 A	80 A	100 A	125 A	160 A
DX³ 10000 A/ 10 kA C and D curves	≤6 A	6000	12000	12000	T	T	T	T	T
	10 A	5000	7000	7000	7000	T	T	T	T
	16 A	-	6000	6000	6000	6000	T	T	T
	20 A	-	5000	5000	5000	5000	6000	T	T
	25 A	-	-	4500	4500	4500	4500	8500	T
	32 A	-	-	-	3000	4000	4000	7000	10000
	40 A	-	-	-	3000	3000	3000	6000	8000
	50 A	-	-	-	-	3000	3000	5500	7000
	63 A	-	-	-	-	3000	3000	5000	6000

T = Total discrimination

Selectivity between modular circuits breakers (MCB) and Moulded Case Circuit Breakers (MCCBs):

Selectivity limit at 415 V ± : values in Ampere.

		MCCB upstream							
		DPX³ 250 DPX³ 250 + diff (Thermo-magnetic & electronic) 25 - 36 - 50 - 70 kA				DPX 400 AB 36 kA		DPX / H / L 1250 (Thermo-magnetic) 50 - 70 - 100 kA	DPX / H 1600 (electronic) 36 - 70 kA
MCB downstream		100 A	160 A	200 A	250 A	320 A	400 A	500 to 1250 A	630 to 1600 A
DX³ 10000 A/10 kA C and D curves	≤6 A	T	T	T	T	T	T	T	T
	10 A	T	T	T	T	T	T	T	T
	16 A	T	T	T	T	T	T	T	T
	20 A	T	T	T	T	T	T	T	T
	25 A	T	T	T	T	T	T	T	T
	32 A	5000	T	T	T	T	T	T	T
	40 A	5000	T	T	T	T	T	T	T
	50 A	4000	T	T	T	T	T	T	T
	63 A	4000	T	T	T	T	T	T	T

Technical data

Time current characteristics for C curve

Rating - 6 to 63 A Ref. calibration Temp. : 30 °C
Ref. standard : IS / IEC 60898-1

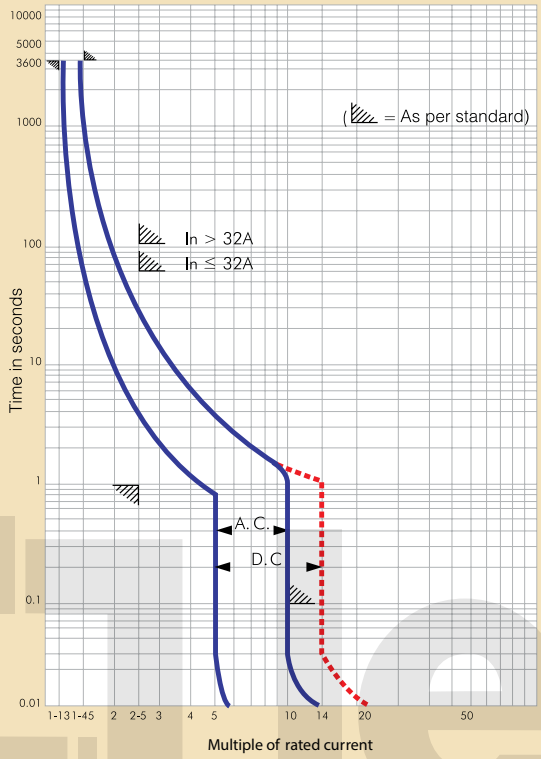

Time current characteristics for 80-125 A

Rating - 80 A to 125 A Ref. calibration Temp. : 30 °C
Ref. standard : IEC 60947-2

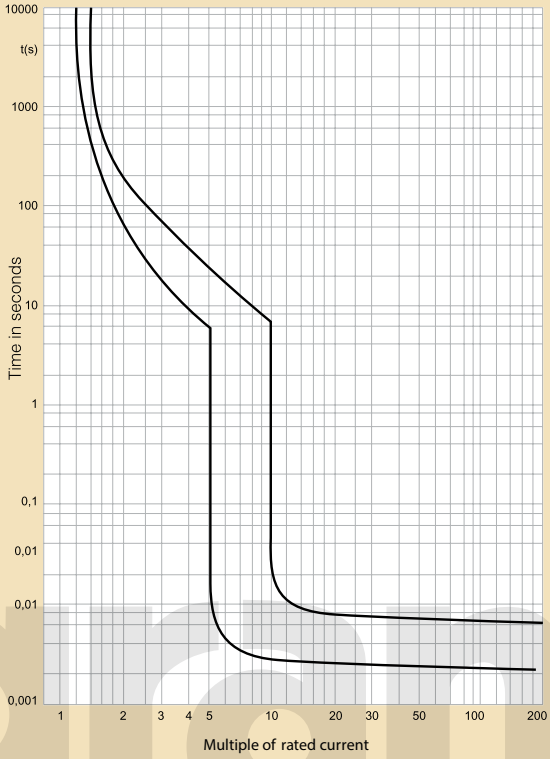

Time current characteristics for D curve

Rating - 0.5 to 63 A Ref. calibration Temp. : 30 °C
Ref. standard : IS / IEC 60898-1

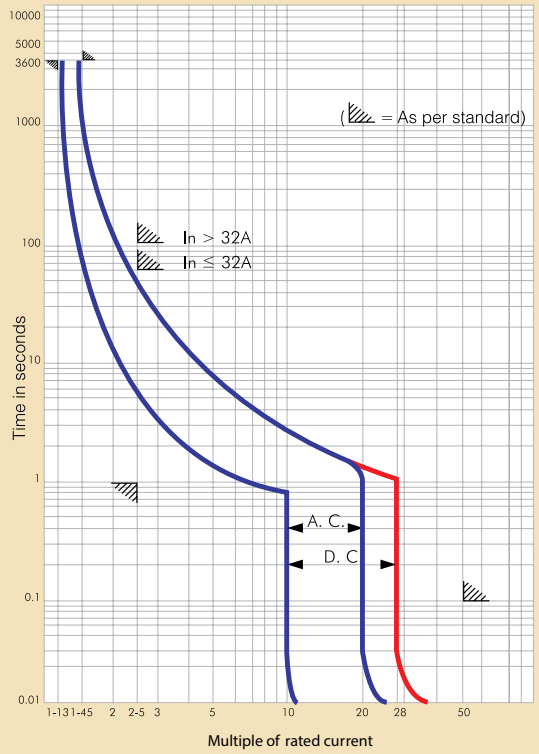

■ Selection chart*

DX³ MCBs (10 kA) and RCBOs 3 phase motor application

Motor H.P.	KW	MCB rating (A)	
		Star Delta	DOL
1	0.75	-	1.6 A
1.5	1.10	-	2 A
2	1.50	-	3 A
3	2.25	-	4 A
4	3.00	-	10 A
5	3.75	10 A	10 A
6	4.50	10 A	10 A
7.5	5.50	16 A	16 A
10	7.50	16 A	20 A
12.5	9.30	20 A	25 A
15	11.00	25 A	32 A
17.5	13.00	25 A	32 A
20	15.00	40 A	40 A
25	18.50	40 A	50 A
30	22.50	50 A	63 A
35	26.00	63 A	-

For MCB/RCBO ratings :

Single phase = P = VI

Three phase = P = √3 VI Cos φ = 1.732 x VI x 0.8

Note : One lighting circuit can have upto 800 W or upto 10 points.
One power circuit can have upto 3000 W or upto 2 power points.
* The data given above is only for guidance.
The exact rating must be selected only after considering the motor characteristics.

■ Technical data

Isolators

Specifications	IEC 60947-3	
Number of poles	DP, TP, FP	
Utilization category	AC22 A	
Rated operational voltage and frequency	415 V, 50/60 Hz	
Insulation voltage Ui	500 V AC	
Impulse voltage Uimp	6 kV	
Short circuit making capacity Icm	1000 A	
Endurance	Electrical - 1500 operations with load AC22 A Mechanical - 10000 operation	
Mounting position	Vertical / Horizontal / Upside down / On the side	
Fixing	On symmetric rail EN/IEC 60715 or DIN 35	
Maximum cable size	Top/Bottom	1 x 1.5 mm^2 to 35 mm^2
	Rigid cable	2 x 1.5 mm^2 to 16 mm^2
	Top/Bottom	1 x 1.5 mm^2 to 25 mm^2
	Flexible cable	2 x 1.5 mm^2 to 10 mm^2
Applied connection torque	Recommended : 3 Nm Minimum : 2 Nm Maximum: 3.5 Nm	
Permissible ambient temperature	Maximum + 70 °C Minimum -25 °C	

Dimensions

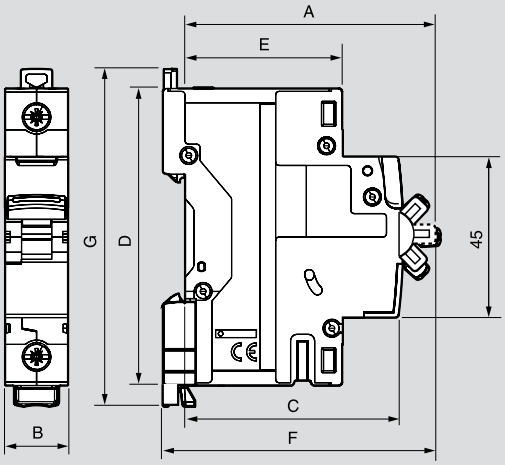

Products	A	B						C	D	E	F	G
		SP	SPN	DP	TP	TPN	FP					
DX³ MCBs (0.5 to 63A)	70	17.7	35.6	35.6	53.4	71.2	71.2	60	83	44	76	94
DX³ MCBs (80 - 125A)	70	26.7	-	53.4	80.1	-	106.8	60	83	44	76	89
DX³ Isolators	70	-	-	35.6	53.4	-	71.2	60	83	44	76	94
DX³ RCCB - type AC (DP)	70	-	-	35.6	-	-	-	60	83	44	76	94
DX³ RCCB - type AC (FP)	71.5	-	-	-	-	-	71.2	60	83	44	77.5	94
DX³ RCCB - type A - S (DP)	70	-	-	35.6	-	-	-	60	83	44	76	94
DX³ RCCB - type A - S (FP)	71.5	-	-	-	-	-	71.2	60	83	44	77.5	94
DX³ RCCB - type Hpi (DP)	70	-	-	35.6	-	-	-	60	83	44	76	94
DX³ RCCB - type Hpi (FP)	71.5	-	-	-	-	-	71.2	60	83	44	77.5	94
DX³ RCBO - type AC	70	-	-	71.2	-	-	142.4	60	83	44	76	94
DX³ RCBO - type AC (DP 2 mod.)	70	-	-	35.6	-	-	-	60	83	44	76	94
DX³ RCBO - type Hpi (DP 2 mod.)	70	-	-	35.6	-	-	-	60	83	44	76	94
Auxiliary contacts	70	8.7						60	83	44	76	83
Auxiliary contacts	70	17.7						60	83	44	76	83
Shunt trip	70	17.7						60	83	44	76	83
Minimum voltage trip	70	17.7						60	83	44	76	83
POP over voltage	74	54						74	83	44	80.5	89
Remote control for MCB / RCBO	74	54						74	83	44	80.5	89
Lexic contactors 20 A	62	17.8						60	83	44	67.5	-
Lexic contactors 40 A (2 mod.)	60	35.6						61	80	44	67	-
Lexic contactors 40 A / 63 A (3 mod.)	60	54						61	80	44	67	-