# DX³ MCBs

## MCBs for AC applications till 63 A (continued)

N

4087 19

4087 46

4087 52

4087 90

Technical characteristics **p. 32-45**

10 kA ISI marked as per IS/IEC 60898-1 2002
Integrated label holder
Sliding bottom clamp
Improved air channels
Color coded On/Off indication on dolly
Biconnect lower terminals
IP 20 protected terminals
Sliding shutters
DC-80 V per pole - 1 kA

| Pack | Cat.Nos | DX³ MCBs - D curve | |
|---|---|---|---|
| | | **Single pole 240/415 V~** | |
| | | Nominal rating In (A) | Number of modules |
| 1/10/120 | 4087 06 | 0.5 | 1 |
| 1/10/120 | 4087 07 | 1 | 1 |
| 1/10/120 | 4087 09 | 2 | 1 |
| 1/10/120 | 4087 10 | 3 | 1 |
| 1/10/120 | 4087 11 | 4 | 1 |
| 1/10/120 | 4087 12 | 6 | 1 |
| 1/10/120 | 4087 14 | 10 | 1 |
| 1/10/120 | 4087 16 | 16 | 1 |
| 1/10/120 | 4087 17 | 20 | 1 |
| 1/10/120 | 4087 18 | 25 | 1 |
| 1/10/120 | 4087 19 | 32 | 1 |
| 1/10/120 | 4087 20 | 40* | 1 |
| 1/10/120 | 4087 21 | 50* | 1 |
| 1/10/120 | 4087 22 | 63* | 1 |
| | | **Single pole + Neutral 230 V~** | |
| 1/5/60 | 4087 26 | 0.5 | 2 |
| 1/5/60 | 4087 27 | 1 | 2 |
| 1/5/60 | 4087 29 | 2 | 2 |
| 1/5/60 | 4087 30 | 3 | 2 |
| 1/5/60 | 4087 31 | 4 | 2 |
| | | **2 pole 415 V~** | |
| 1/40 | 4087 32 | 0.5 | 2 |
| 1/40 | 4087 33 | 1 | 2 |
| 1/40 | 4087 35 | 2 | 2 |
| 1/40 | 4087 36 | 3 | 2 |
| 1/40 | 4087 37 | 4 | 2 |
| 1/40 | 4087 38 | 6 | 2 |
| 1/40 | 4087 40 | 10 | 2 |
| 1/40 | 4087 42 | 16 | 2 |
| 1/40 | 4087 43 | 20 | 2 |
| 1/40 | 4087 44 | 25 | 2 |
| 1/40 | 4087 45 | 32 | 2 |
| 1/40 | 4087 46 | 40* | 2 |
| 1/40 | 4087 47 | 50* | 2 |
| 1/40 | 4087 48 | 63* | 2 |

| Pack | Cat.Nos | DX³ MCBs - D curve | |
|---|---|---|---|
| | | **3 pole 415 V~** | |
| | | Nominal rating In (A) | Number of modules |
| 1/32 | 4087 52 | 0.5 | 3 |
| 1/32 | 4087 53 | 1 | 3 |
| 1/32 | 4087 55 | 2 | 3 |
| 1/32 | 4087 56 | 3 | 3 |
| 1/32 | 4087 57 | 4 | 3 |
| 1/32 | 4087 58 | 6 | 3 |
| 1/32 | 4087 60 | 10 | 3 |
| 1/32 | 4087 62 | 16 | 3 |
| 1/32 | 4087 63 | 20 | 3 |
| 1/32 | 4087 64 | 25 | 3 |
| 1/32 | 4087 65 | 32 | 3 |
| 1/32 | 4087 66 | 40* | 3 |
| 1/32 | 4087 67 | 50* | 3 |
| 1/32 | 4087 68 | 63* | 3 |
| | | **3 pole + Neutral 415 V~** | |
| 1/32 | 4087 72 | 0.5 | 4 |
| 1/32 | 4087 73 | 1 | 4 |
| 1/32 | 4087 75 | 2 | 4 |
| 1/32 | 4087 76 | 3 | 4 |
| 1/32 | 4087 77 | 4 | 4 |
| | | **4 pole 415 V~** | |
| 1/32 | 4087 78 | 0.5 | 4 |
| 1/32 | 4087 79 | 1 | 4 |
| 1/32 | 4087 81 | 2 | 4 |
| 1/32 | 4087 82 | 3 | 4 |
| 1/32 | 4087 83 | 4 | 4 |
| 1/32 | 4087 84 | 6 | 4 |
| 1/32 | 4087 86 | 10 | 4 |
| 1/32 | 4087 88 | 16 | 4 |
| 1/32 | 4087 89 | 20 | 4 |
| 1/32 | 4087 90 | 25 | 4 |
| 1/32 | 4087 91 | 32 | 4 |
| 1/32 | 4087 92 | 40* | 4 |
| 1/32 | 4087 93 | 50* | 4 |
| 1/32 | 4087 94 | 63* | 4 |

*Kindly contact nearest Legrand Sales Office for enquiries

## Technical data

| | | |
|---|---|---|
| Specifications | IS/IEC 60898-1 2002 | |
| Number of poles | SP, SPN, DP, TP, TPN, FP | |
| Characteristics | C & D Curve | |
| Breaking capacity | 10 kA 0.5 A to 63 A as per IS/IEC 60898-1 2002<br>16 kA for 0.5 A to 25 A as per IEC 60947-2 | |
| Rated voltage | 230 V/400 V | |
| Current limitation class | Class 3 | |
| Frequency | 50 Hz/60 Hz | |
| Minimum operating voltage | 12 V AC/DC | |
| Enclosures | Polyester<br>self extinguishing, heat and fire resistant according to IEC 60898-1, glow-wire test at 960 °C for external parts made of insulating material necessary to retain in position current-carrying parts and parts of protective circuit (650 °C for all other external parts made of insulating material) | |
| Mounting position | Vertical / Horizontal / Upside down / On the side | |
| Fixing | On symmetric rail EN/IEC 60715 or DIN 35 | |
| Maximum cable size | Top/Bottom<br>Rigid cable | 1 x 1.5 mm² to 35 mm²<br>2 x 1.5 mm² to 16 mm² |
| | Top/Bottom<br>Flexible cable | 1 x 1.5 mm² to 25 mm²<br>2 x 1.5 mm² to 10 mm² |
| Applied connection torque | Recommended : 2.5 Nm<br>Minimum : 2 Nm Maximum: 3 Nm | |
| Mechanical endurance | 20000 operations without load | |
| Electrical endurance | 10000 operations with load (under In*cos = 0.9)<br>2000 operations under In, DC current | |
| Permissible ambient temperature | 0.5 to 63 A - Maximum + 70 °C Minimum -25 °C | |

| | | |
|---|---|---|
| Specifications | IEC 60947-2 | |
| Number of poles | SP, DP, TP, FP | |
| Breaking capacity | 10 kA 80 A to 125 A as per IEC 60898<br>16 kA for 80 A to 125 A as per IEC 60947-2 | |
| Rated voltage | 230 V/400 V | |
| Current limitation class | Class 3 | |
| Frequency | 50 Hz/60 Hz | |
| Minimum operating voltage | 12 V AC/DC | |
| Enclosures | Polyester<br>self extinguishing, heat and fire resistant according to IEC 60898-1, glow-wire test at 960°C for external parts made of insulating material necessary to retain in position current-carrying parts and parts of protective circuit (650°C for all other external parts made of insulating material) | |
| Mounting position | Vertical / Horizontal / Upside down / On the side | |
| Fixing | On symmetric rail EN/IEC 60715 or DIN 35 | |
| Maximum cable size | Top/Bottom<br>Rigid cable | 1 x 1.5 mm² to 50 mm²<br>2 x 1.5 mm² to 25 mm² |
| | Top/Bottom<br>Flexible cable | 1 x 1.5 mm² to 35 mm²<br>2 x 1.5 mm² to 20 mm² |
| Applied connection torque | Recommended : 2.5 Nm<br>Minimum : 2 Nm Maximum: 3 Nm | |
| Mechanical endurance | 20000 operations without load | |
| Electrical endurance | 10000 operations with load (under In*cos = 0.9)<br>2000 operations under In, DC current | |
| Permissible ambient temperature | 80 to 125 A - Maximum + 70 °C Minimum -25 °C | |

### Power dissipated in Watt per pole at In

Circuit breakers C and D curves

| In (A) | 0,5 | 1 | 1,6 | 2 | 3 | 4 | 5 | 6 | 7,5 | 10 | 16 | 20 | 25 | 32 | 40 | 50 | 63 |
|---|---|---|---|---|---|---|---|---|---|---|---|---|---|---|---|---|---|
| 1P ÷ 4P | **1.7** | **2** | **2** | **2** | **2** | **2** | **2.1** | **1.1** | **1.4** | **1.8** | **2** | **2.2** | **2.7** | **3.2** | **4** | **4.5** | **5.5** |
| **Permitted limit as per IEC 60898** | 3 | 3 | 3 | 3 | 3 | 3 | 3 | 3 | 3.5 | 4.5 | 4.5 | 6 | 7.5 | 9 | 13 | | |

Impedance per pole ( Ω) = $\frac{\text{P dissipated}}{\text{In}^2}$

| | Ambient Temperature / In | | | | | | | | | |
|---|---|---|---|---|---|---|---|---|---|---|
| **In (A)** | - 25 °C | - 10 °C | 0 °C | 10 °C | 20 °C | 30 °C | 40 °C | 50 °C | 60 °C | 70 °C |
| **0,5** | 0.62 | 0.6 | 0.57 | 0.55 | 0.52 | 0.5 | 0.47 | 0.42 | 0.40 | 0.38 |
| **1** | 1.5 | 1.4 | 1.3 | 1.2 | 1.1 | 1 | 0.9 | 0.8 | 0.7 | 0.6 |
| **2** | 2.8 | 2.6 | 2.5 | 2.3 | 2.2 | 2 | 2 | 1.9 | 1.8 | 1.7 |
| **3** | 3.8 | 3.6 | 3.5 | 3.3 | 3.2 | 3.0 | 2.9 | 2.8 | 2.7 | 2.6 |
| **4** | 4.5 | 4.2 | 4.0 | 3.9 | 3.7 | 3.5 | 3.4 | 3.3 | 3.2 | 3.1 |
| **5** | 6.4 | 6.0 | 5.8 | 5.5 | 5.3 | 5.0 | 4.8 | 4.7 | 4.5 | 4.6 |
| **6** | 7.5 | 7.0 | 6.6 | 6.4 | 6.2 | 6.0 | 5.8 | 5.6 | 5.4 | 5.3 |
| **10** | 12.5 | 11.5 | 11.1 | 10.7 | 10.3 | 10.0 | 9.7 | 9.3 | 9.0 | 8.7 |
| **16** | 20.0 | 18.7 | 18.0 | 17.3 | 16.6 | 16.0 | 15.4 | 14.7 | 14.1 | 13.5 |
| **20** | 25.0 | 23.2 | 22.4 | 21.6 | 20.8 | 20.0 | 19.2 | 18.4 | 17.6 | 16.8 |
| **25** | 31.5 | 29.5 | 28.3 | 27.2 | 26.0 | 25.0 | 24.0 | 22.7 | 21.7 | 20.7 |
| **32** | 41.0 | 37.8 | 36.5 | 34.9 | 33.3 | 32.0 | 30.7 | 29.1 | 27.8 | 26.5 |
| **40** | 51.0 | 48.0 | 46.0 | 44.0 | 42.0 | 40.0 | 38.0 | 36.0 | 34.0 | 32.0 |
| **50** | 64.0 | 60.0 | 57.5 | 55.0 | 52.5 | 50.0 | 47.5 | 45.0 | 42.5 | 40.0 |
| **63** | 80.6 | 75.6 | 72.5 | 69.9 | 66.1 | 63.0 | 59.8 | 56.1 | 52.9 | 49.7 |

## Choice of DX³ MCBs for capacitor banks

This table shows the rated current of MCBs to be used when controlling capacitor banks so as to guarantee its function and shortcircuit protection.
Overload protection is not necessary since these installations cannot be overloaded.
This data refers to shortcircuit protection in absence of harmonics or heavy transitory currents.

| | DX³ MCB rating in amps | | | |
|---|---|---|---|---|
| | C characteristic | | D characteristic | |
| **Power of capacitor bank in KVAR** | **Single phase 240 V** | **Three phase 415 V** | **Single phase 240 V** | **Three phase 415 V** |
| 0.5 | 10 | 6 | 3 | 1 |
| 1 | 20 | 6 | 6 | 2 |
| 1.5 | 32 | 10 | 10 | 3 |
| 2.5 | 40 | 16 | 10 | 4 |
| 3 | 50 | 16 | 16 | 4 |
| 3.5 | 63 | 20 | 16 | 6 |
| 4 | 63 | 25 | 16 | 6 |
| 4.5 | ... | 25 | 20 | 10 |
| 5 | ... | 32 | 20 | 10 |
| 5.5 | ... | 32 | 25 | 10 |
| 6 | ... | 32 | 25 | 10 |
| 6.5 | ... | 40 | 25 | 10 |
| 7 | ... | 40 | 32 | 10 |
| 7.5 | ... | 50 | 32 | 16 |
| 8 | ... | 50 | 32 | 16 |
| 8.5 | ... | 50 | 40 | 16 |
| 9 | ... | 50 | 40 | 16 |
| 9.5 | ... | 63 | 40 | 16 |
| 10 | | 63 | 40 | 16 |
| 10.5 | 80 | 63 | 60 | 16 |
| 11 | 80 | | 50 | 16 |
| 11.5 | 80 | | 50 | 16 |
| 12 | 80 | | 50 | 20 |
| 12.5 | 80 | | 50 | 20 |
| 13 | 100 | ... | 63 | 20 |
| 13.5 | 100 | ... | 63 | 20 |
| 14 | 100 | ... | 63 | 20 |
| 14.5 | 100 | ... | 63 | 25 |
| 15 | 100 | ... | 63 | 25 |
| 15.5 | 100 | ... | | 25 |
| 16 | 100 | ... | | 25 |
| 16.5 | 125 | ... | ... | 25 |
| 17 | 125 | ... | ... | 25 |
| 17.5 | 125 | ... | ... | 25 |
| 18 | 125 | ... | ... | 32 |
| 18.5 | 125 | ... | ... | 32 |
| 19 | 125 | ... | ... | 32 |
| 19.5 | 125 | ... | ... | 32 |
| 20 | 125 | ... | ... | 32 |
| 20.5 | ... | ... | ... | 32 |
| 21 | ... | ... | ... | 32 |
| 21.5 | ... | ... | ... | 32 |
| 22 | ... | ... | ... | 32 |
| 22.5 | ... | ... | ... | 32 |
| 23 | ... | ... | ... | 32 |
| 23.5 | ... | ... | ... | 40 |
| 24 | ... | ... | ... | 40 |
| 24.5 | ... | ... | ... | 40 |
| 25 | ... | ... | ... | 40 |
| 25.5 | ... | ... | ... | 40 |
| 26 | ... | ... | ... | 40 |
| 26.5 | ... | ... | ... | 40 |
| 27 | ... | ... | ... | 40 |
| 27.5 | ... | ... | ... | 40 |
| 28 | ... | ... | ... | 40 |
| 28.5 | ... | ... | ... | 40 |
| 29 | ... | ... | ... | 50 |
| 29.5 | ... | ... | ... | 50 |
| 30 | ... | ... | ... | 50 |
| 30.5 | ... | 80 | ... | 50 |
| 31 | ... | 80 | ... | 50 |
| 31.5 | ... | 80 | ... | 50 |
| 32 | ... | 80 | ... | 50 |
| 32.5 | ... | 80 | ... | 50 |
| 33 | ... | 80 | ... | 50 |
| 33.5 | ... | 80 | ... | 50 |
| 34 | ... | 80 | ... | 50 |
| 34.5 | ... | 80 | ... | 50 |
| 35 | ... | 80 | ... | 50 |
| 35.5 | ... | 80 | ... | 50 |
| 36 | ... | 80 | ... | 50 |
| 36.5 | ... | 80 | ... | 63 |
| 37 | ... | 80 | ... | 63 |
| 37.5 | ... | 80 | ... | 63 |
| 38 | ... | 80 | ... | 63 |
| 38.5 | ... | 80 | ... | 63 |
| 39 | ... | 100 | ... | 63 |
| 39.5 | ... | 100 | ... | 63 |
| 40 | ... | 100 | ... | 63 |
| 40.5 | ... | 100 | ... | 63 |
| 41 | ... | 100 | ... | 63 |
| 41.5 | ... | 100 | ... | 63 |
| 42 | ... | 100 | ... | 63 |
| 42.5 | ... | 100 | ... | 63 |
| 43 | ... | 100 | ... | 63 |
| 43.5 | ... | 100 | ... | 63 |
| 44 | ... | 100 | ... | 63 |
| 44.5 | ... | 100 | ... | 63 |
| 45 | ... | 100 | ... | 63 |
| 45.5 to 48 | ... | 100 | ... | ... |
| 48.5 to 60 | ... | 125 | ... | ... |

## Technical data

### Correct polarity connections for DC MCBs

**• Supply terminals**

When supply is given at lower terminals

**Single pole MCB**

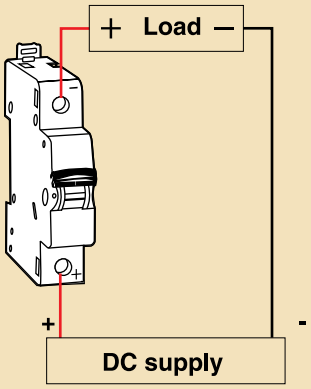


**Double pole MCB**

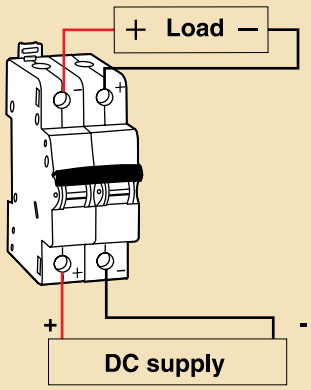


**• Supply terminals**

When supply is given at upper terminals

**Single pole MCB**

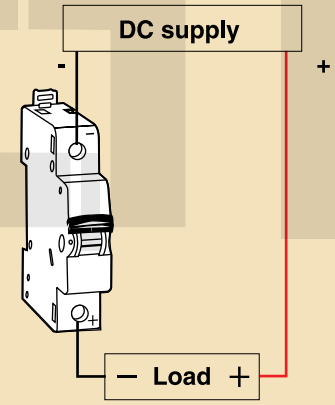


**Double pole MCB**

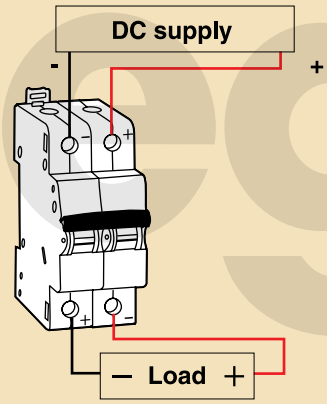


### Derating of MCB for use with fluorescent lights

Ferromagnetic and electronic ballasts have a high inrush current for a short time. These currents can cause the tripping of circuit breakers. At the time of the installation, it should take into account the maximum number of ballasts per circuit breaker that the manufacturers of lamps and ballasts indicate in their catalogues.

### Influence of the altitude

| | ≤2000 m | 3000 m | 4000 m | 5000 m |
|---|---|---|---|---|
| **Dielectric holding** | 3000 V | 2500 V | 2000 V | 1500 V |
| **Max operational voltage** | 400 V | 400 V | 400 V | 400 V |
| **Derating at 30 °C** | none | none | none | none |

### Derating of MCBs function of the number of devices side by side:

When several MCBs are juxtaposed and operate simultaneously, the thermal evacuation of the poles is limited. This results in an increase in operating temperature of the circuit breakers which can cause unwanted tripping. It is recommended to apply the following coefficients to the rated currents.

### Influence of the altitude

| Number of circuit breakers side by side | Coefficient |
|---|---|
| 2 - 3 | 0.9 |
| 4 - 5 | 0.8 |
| 6 - 9 | 0.7 |
| ≥10 | 0.6 |

These values are given by the recommendation of IEC 60439-1, NF C 63421 and EN 60439-1 standards.

### Tripping characteristics

Standards has established different tripping characteristics depending on minimum and maximum values of magnetic trip.

| DX³ MCB | Type | Im1 | Im2 | Typical application |
|---|---|---|---|---|
| **0.5 A to 63 A** | D | 10 In | 20 In | Protection of cable and appliance which has very high starting currents. |
| **6 A to 63 A** | C | 5 In | 10 In | Protection of cable used for lighting load, power load and induction loads with high starting current. |

Im1 - hold limit
Im2 - Trip limit

### DX³ MCBs versus zero point extinguishing MCBs

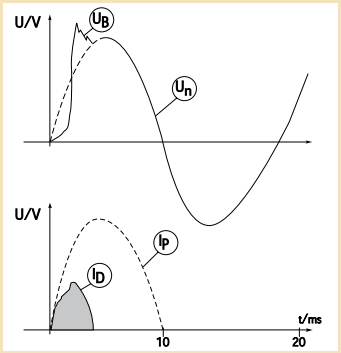


Current limiting DX ³ MCB

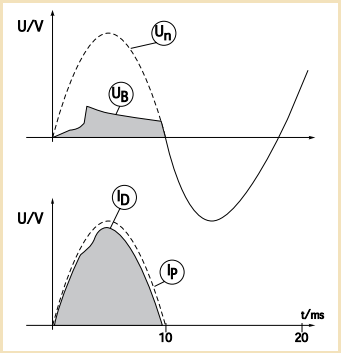


Zero point extinguishing MCB

Un = Mains Voltage
UB = Arc Voltage
ID = Let-through short circuit current
IP = Prospective short circuit current

## Technical data

### Association of protection devices

Association is the technique by which the breaking capacity of a MCB is increased by coordinating it with another protection device, placed upstream. This coordination makes it possible to use a protection device with a breaking capacity which is lower than the maximum prospective short-circuit current at its installation point

The breaking capacity of a protection device must be at least equal to the maximum short-circuit which may occur at the point at which this device is installed.

In exceptional cases, the breaking capacity may be lower than the maximum prospective short-circuit, as long as:

- is associated with a device upstream which has the necessary breaking capacity at its own installation point
- The downstream device and the trunking being protected can withstand the power limited by the association of the devices.

Association therefore leads to substantial savings.

The association values given in the tables on the following pages are based on laboratory tests carried out in accordance with IEC 60947-2.

Note: In the case of single phase circuits (protected by P+N or 2P MCBs) in a 415 V AC supply, supplied upstream by a 3-phase circuit, it is advisable to use the association tables for 230 V.

### Example of association

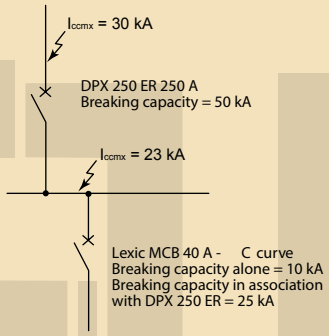


### 3-level association

An association may be created on three levels if one of the conditions below is met.

- The upstream device A must have an adequate breaking capacity at its installation point. Devices B and C are associated with device A. Simply check that the association values B + A and C + A have the necessary breaking capacity.
In this case, there is no need to check the association between devices B and C.

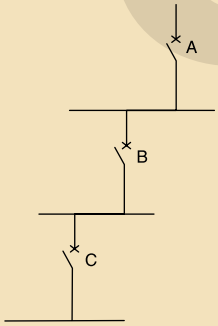


- The association is made between successive devices: Upstream device A, which has an adequate breaking capacity at its installation point, device C is associated with device B which is in turn associated with device A.

Simply check that the association values C+B and B+A have the necessary breaking capacity. In this case, there is no need to check the association between devices A and C.

### Association in IT connection systems

The values given in the tables should only be used for TN and TT systems.

Although this practice is not widely used, these values may also be used for installations with IT systems. It is therefore advisable to check that each protection device, on its own, can break, on a single pole, the maximum double fault current at the point in question.

### Association between distribution boards

Association applies to devices installed in the same distribution board as well as in different boards. It is therefore generally possible to benefit from the advantages of the association between devices located, for example, in a main distribution board and in a secondary board.

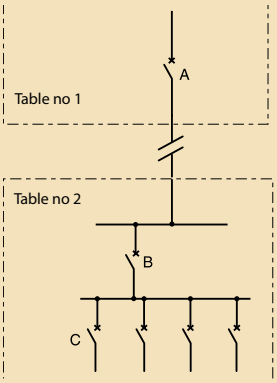


### MCB - switch association

The switches must be systematically protected by an MCB placed upstream. There is considered to be protection against overloads if the rating of switch I is at least equal to that of the upstream MCB, D. If this is not the case, the thermal stresses (devices and conductors) must be checked.
The tables on the following pages give the breaking capacity limits of the MCB - switch associations.

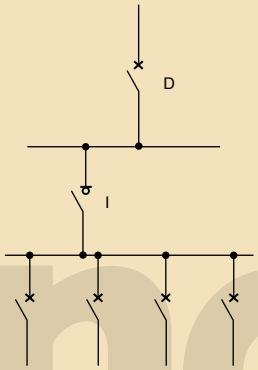

## Discrimination of protection devices

Discrimination is a technique which consists of coordinating the protection in such a way that a fault on one circuit only trips the protection placed at the head of that circuit, thus avoiding rendering the remainder of the installation inoperative. Discrimination improves continuity of service and safety of the installation

Discrimination rules are set by the regulations concerning public buildings and for safety installations in general.

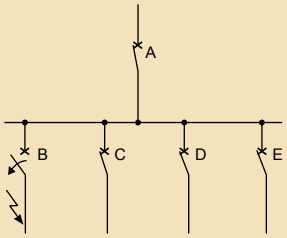


Discrimination between A and B is said to be "total" if it is provided up to the value of the maximum prospective short-circuit at the point at which B is installed.

By extension, in the tables on the following pages, total discrimination, indicated by T, means that there is discrimination up to the breaking capacity of device B.

Discrimination between A and B is said to be "partial" in the other cases.

The discrimination limit (given in the following tables) is therefore defined. This gives the short-circuit current value below which only MCB B will open and above which MCB A will also open.

There are a number of techniques for providing discrimination:

- Current discrimination, used for terminal circuits which have low short-circuits.
- Time discrimination, provided by a delay on tripping the upstream MCB
- Logical discrimination, a variant of time discrimination, used on electronic MCBs via a special link between the devices.

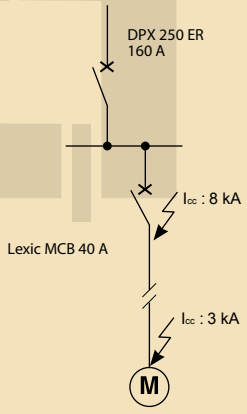


Since almost all faults occur during use, partial discrimination may be adequate if the discrimination limit is higher than the value of the maximum short-circuit which may occur at the point of use (or at the end of the trunking). This is referred to as "operating discrimination". This technique is very often adequate, more economical and less restricting in terms of implementation.

The discrimination limit for the association DPX 250 ER (160 A) with Lexic MCB 40 A (C curve) is 6 kA. Since the prospective ISC at the point of installation is 8 kA, the discrimination is not total. However, there is discrimination at the point of use at which the prospective short-circuit is only 3 kA.

### Current discrimination

This technique is based on the off set of the intensity of the tripping curves of the upstream and downstream MCBs. It is checked by comparing these curves and checking that they do not overlap. It applies for the overload zone and the short-circuit zone, and the further apart the ratings of the devices, the better the discrimination.

- On overloads

To have discrimination in the overload zone, the ratio of the setting currents (Ir) must be at least 2.

- On short-circuits

To have discrimination in the short circuit zone, the ratio of the magnetic setting currents (Im) must be at least 1.5.

The discrimination limit is then equal to the magnetic release current ImA of the upstream MCB. The discrimination is then total as long as IscB is less than ImA.

Current discrimination is therefore very suitable for terminal circuits where the short-circuits are relatively weak.

In other cases, time discrimination may be used together with current discrimination.

### Current discrimination

The discrimination is total for Isc $_{B}$

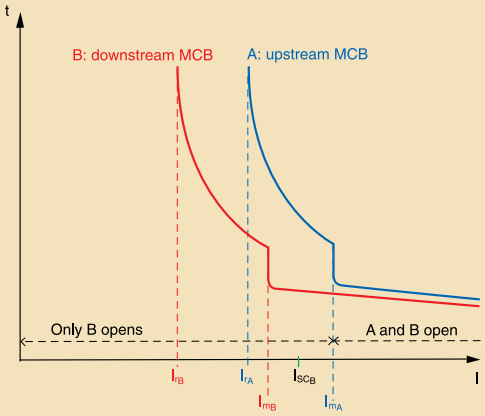


$I_{SCB}$ : maximum short-circuit at the point at which MCB B is installed

When the downstream MCB B is a limiting device, the short-circuit current is limited in terms of time and amplitude. The discrimination is therefore total if the limited current IscB, which device B allows to pass, is lower than the tripping current of device A

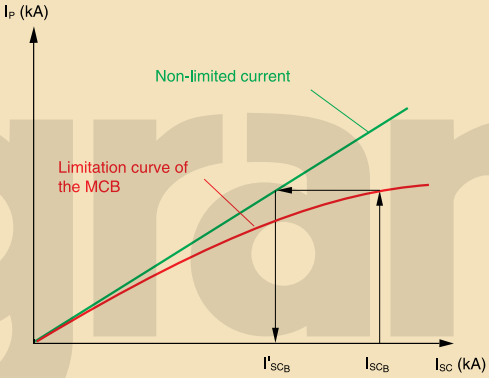


$I_{SCB}$ : prospective short-circuit at the point at which the device is installed
$I'_{SCB}$ : short-circuit limited by device B

### Time discrimination

This technique is based on the offset of the times of the tripping curves of the MCBs in series. It is checked by comparing the curves and is used for discrimination in the short-circuit zone. It is also used in addition to current discrimination in order to obtain discrimination beyond the magnetic setting current of the upstream MCB (ImA).

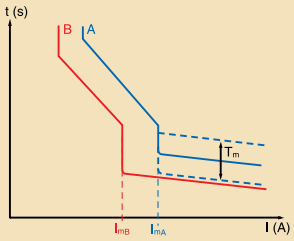


The following is necessary:

- It must be possible to set a time delay on the upstream MCB
- The upstream MCB must be able to withstand the short-circuit current and its effects for the whole period of the time delay
- The trunking through which this current passes must be able to withstand the thermal stresses ($I^2t$).

The non-tripping time of the upstream device must be longer than the breaking time (including any time delay) of the downstream device.

DPX MCBs have a number of time delay setting positions for creating discrimination with a number of stages.

## Technical data

### Coordination between modular circuit-breakers and fuses, three-phase network (+ neutal) 400 / 415 V± according to standard IEC/EN 60947-2:

For TT or TN neutral system in 240/415 V network, to know the breaking capacity of the combination of a double pole breaker (connected between phase and neutral under 230 V) downstream of a triple-pole circuit-breaker, take the values shown in Tables 230/400 V.

| | | Fuse upstream gG Type | | | | | | | | | |
|---|---|---|---|---|---|---|---|---|---|---|---|
| MCB downstream | | ≤20 A | 25 A | 32 A | 40 A | 50 A | 63 A | 80 A | 100 A | 125 A | 160 A |
| DX³ 10000 A/10 kA C and D curves | ≤6 A | 100 kA | 100 kA | 100 kA | 100 kA | 100 kA | 100 kA | 100 kA | 100 kA | 100 kA | 40 kA |
| | 10 A | 100 kA | 100 kA | 100 kA | 100 kA | 100 kA | 100 kA | 100 kA | 100 kA | 100 kA | 40 kA |
| | 16 A | - | 100 kA | 100 kA | 100 kA | 100 kA | 100 kA | 100 kA | 100 kA | 100 kA | 40 kA |
| | 20 A | - | - | 100 kA | 100 kA | 100 kA | 100 kA | 100 kA | 100 kA | 100 kA | 40 kA |
| | 25 A | - | - | - | 100k A | 100 kA | 100 kA | 100 kA | 100 kA | 100 kA | 40 kA |
| | 32 A | - | - | - | - | 100 kA | 100 kA | 100 kA | 100 kA | 100 kA | 40 kA |
| | 40 A | - | - | - | - | - | 100 kA | 100 kA | 100 kA | 100 kA | 40 kA |
| | 50 A | - | - | - | - | - | - | 100 kA | 100 kA | 100 kA | 40 kA |
| | 63 A | - | - | - | - | - | - | 100 kA | 100 kA | 100 kA | 40 kA |

| | | Fuse upstream aM Type | | | | | | | | | |
|---|---|---|---|---|---|---|---|---|---|---|---|
| MCB downstream | | ≤20 A | 25 A | 32 A | 40 A | 50 A | 63 A | 80 A | 100 A | 125 A | 160 A |
| DX³ 10000 A/10 kA C and D curves | ≤6 A | 100 kA | 100 kA | 100 kA | 100 kA | 100 kA | 100 kA | 100 kA | 100 kA | 100 kA | 40 kA |
| | 10 A | 100 kA | 100 kA | 100 kA | 100 kA | 100 kA | 100 kA | 100 kA | 100 kA | 100 kA | 40 kA |
| | 16 A | - | 100 kA | 100 kA | 100 kA | 100 kA | 100 kA | 100 kA | 100 kA | 100 kA | 40 kA |
| | 20 A | - | - | 100 kA | 100 kA | 100 kA | 100 kA | 100 kA | 100 kA | 100 kA | 40 kA |
| | 25 A | - | - | - | 100 kA | 100 kA | 100 kA | 100 kA | 100 kA | 100 kA | 40 kA |
| | 32 A | - | - | - | - | 100 kA | 100 kA | 100 kA | 100 kA | 100 kA | 40 kA |
| | 40 A | - | - | - | - | - | 100 kA | 100 kA | 100 kA | 100 kA | 40 kA |
| | 50 A | - | - | - | - | - | - | 100 kA | 100 kA | 100 kA | 40 kA |
| | 63 A | - | - | - | - | - | - | 100 kA | 100 kA | 100 kA | 40 kA |

All these values are also valid for circuit breakers associated to differential blocks.
According to the curves and ratings of circuit breakers, attention to the threshold and size of upstream fuse which must necessarily be higher.

### Coordination between modular circuit-breakers, three-phase network (+ neutal) 400 / 415 V± according to IEC/EN 60947-2:

For TT or TN neutral system in 230/400 V network, to know the breaking capacity of the combination of a double pole breaker (connected between phase and neutral under 230 V) downstream of a triple-pole circuit-breaker, take the values shown in Tables 230/400 V.

| | | MCB upstream DX³ 10000/16 kA C and D Curves | | | | | | | |
|---|---|---|---|---|---|---|---|---|---|
| MCB downstream | | ≤25 A | 32 A | 40 A | 50 A | 63 A | 80 A | 100 A | 125 A |
| DX³ 10000 A C Curves | ≤6 A | 16 kA | 16 kA | 16 A | 16 kA | 16 kA | 16 kA | 16 kA | 16 kA |
| | 10 A | 16 kA | 16 kA | 16 kA | 16 kA | 16 kA | 16 kA | 16 kA | 16 kA |
| | 16 A | 16 kA | 16 kA | 16 kA | 16 kA | 16 kA | 16 kA | 16 kA | 16 kA |
| | 20 A | 16 kA | 16 kA | 16 kA | 16 kA | 16 kA | 16 kA | 16 kA | 16 kA |
| | 25 A | - | 16 kA | 16 kA | 16 kA | 16 kA | 16 kA | 16 kA | 16 kA |
| | 32 A | - | - | 16 kA | 16 kA | 16 kA | 16 kA | 16 kA | 16 kA |
| | 40 A | - | - | - | 16 kA | 16 kA | 16 kA | 16 kA | 16 kA |
| | 50 A | - | - | - | - | 16 kA | 16 kA | 16 kA | 16 kA |
| | 63 A | - | - | - | - | - | 16 kA | 16 kA | 16 kA |

| | | m.c.b. upstream DX³ 25 kA C and D Curves | | | | | | | |
|---|---|---|---|---|---|---|---|---|---|
| MCB downstream | | ≤25 A | 32 A | 40 A | 50 A | 63 A | 80 A | 100 A | 125 A |
| DX³ 10000 A C Curves | ≤6 A | 25 kA | 25 kA | 25 kA | 25 kA | 25 kA | 25 kA | 25 kA | 25 kA |
| | 10 A | 25 kA | 25 kA | 25 kA | 25 kA | 25 kA | 25 kA | 25 kA | 25 kA |
| | 16 A | 25 kA | 25 kA | 25 kA | 25 kA | 25 kA | 25 kA | 25 kA | 25 kA |
| | 20 A | 25 kA | 25 kA | 25 kA | 25 kA | 25 kA | 25 kA | 25 kA | 25 kA |
| | 25 A | - | 25 kA | 25 kA | 25 kA | 25 kA | 25 kA | 25 kA | 25 kA |
| | 32 A | - | - | 25 kA | 25 kA | 25 kA | 25 kA | 25 kA | 25 kA |
| | 40 A | - | - | - | 25 kA | 25 kA | 25 kA | 25 kA | 25 kA |
| | 50 A | - | - | - | - | 25 kA | 25 kA | 25 kA | 25 kA |
| | 63 A | - | - | - | - | - | 25 kA | 25 kA | 25 kA |

All these values are also valid for circuit breakers associated to RCD add-on modules.
According to the curves and ratings of circuit breakers, attention to the magnetic threshold and to the size of upstream circuit breakers which must necessarily be higher.

## Technical data

### Coordination between modular circuit-breakers, three-phase network (+ neutal) 400 / 415 V± according to IEC/EN 60947-2:

For TT or TN neutral system in 240/415 V network, to know the breaking capacity of the combination of a double pole breaker (connected between phase and neutral under 230 V) downstream of a triple-pole circuit-breaker, take the values shown in Tables 240/415 V.

| | | MCB upstream | | | | | | | | | | |
|---|---|---|---|---|---|---|---|---|---|---|---|---|
| | | DX³ 36 kA | | | | | | DX³ 50 kA | | | | |
| | | C Curve | | | | | | C and D Curves | | | | |
| MCB downstream | | ≤25 A | 32 A | 40 A | 50 A | 63 A | 80 A | ≤25 A | 32 A | 40 A | 50 A | 63 A |
| DX³ 10000 A C Curves | ≤6 A | 36 kA | 36 kA | 36 kA | 36 kA | 36 kA | 36 kA | 50 kA | 50 kA | 50 kA | 50 kA | 50 kA |
| | 10 A | 36 kA | 36 kA | 36 kA | 36 kA | 36 kA | 36 kA | 50 kA | 50 kA | 50 kA | 50 kA | 50 kA |
| | 16 A | 36 kA | 36 kA | 36 kA | 36 kA | 36 kA | 36 kA | 50 kA | 50 kA | 50 kA | 50 kA | 50 kA |
| | 20 A | 36 kA | 36 kA | 36 kA | 36 kA | 36 kA | 36 kA | 50 kA | 50 kA | 50 kA | 50 kA | 50 kA |
| | 25 A | - | 36 kA | 36 kA | 36 kA | 36 kA | 36 kA | - | 50 kA | 50 kA | 50 kA | 50 kA |
| | 32 A | - | - | 36 kA | 36 kA | 36 kA | 36 kA | - | - | 50 kA | 50 kA | 50 kA |
| | 40 A | - | - | - | 36 kA | 36 kA | 36 kA | - | - | - | 50 kA | 50 kA |
| | 50 A | - | - | - | - | 36 kA | 36 kA | - | - | - | - | 50 kA |
| | 63 A | - | - | - | - | - | 36 kA | - | - | - | - | - |

All these values are also valid for circuit breakers associated to RCD add-on modules.
According to the curves and ratings of circuit breakers, attention to the magnetic threshold and to the size of upstream circuit breakers which must necessarily be higher.

### Coordination between Modular Circuit-Breakers (MCB) and Moulded Case Circuit Breakers (MCCBs), three-phase network (+ neutal) 400 / 415 V± according to standard IEC/EN60947-2:

For TT or TN neutral system in 240/415 V network, to know the breaking capacity of the combination of a double pole breaker (connected between phase and neutral under 230 V) downstream of a triple-pole circuit-breaker, take the values shown in Tables 240/415 V.

| | | MCCB upstream | | | | | | | |
|---|---|---|---|---|---|---|---|---|---|
| | | DPX³ 160 / DPX³ 160 + RCD | | | | | | | |
| | | 16 kA | | | | | | | |
| MCB downstream | | 16 A | 25 A | 40 A | 63 A | 80 A | 100 A | 125 A | 160 A |
| DX³ 10000 A/10 kA C and D curves | ≤6 A | 16 kA | 16 kA | 16 kA | 16 kA | 16 kA | 16 kA | 16 kA | 16 kA |
| | 10 A | 16 kA | 16 kA | 16 kA | 16 kA | 16 kA | 16 kA | 16 kA | 16 kA |
| | 16 A | - | 16 kA | 16 kA | 16 kA | 16 kA | 16 kA | 16 kA | 16 kA |
| | 20 A | - | 16 kA | 16 kA | 16 kA | 16 kA | 16 kA | 16 kA | 16 kA |
| | 25 A | - | - | 16 kA | 16 kA | 16 kA | 16 kA | 16 kA | 16 kA |
| | 32 A | - | - | 16 kA | 16 kA | 16 kA | 16 kA | 16 kA | 16 kA |
| | 40 A | - | - | - | 16 kA | 16 kA | 16 kA | 16 kA | 16 kA |
| | 50 A | - | - | - | 16 kA | 16 kA | 16 kA | 16 kA | 16 kA |
| | 63 A | - | - | - | - | 16 kA | 16 kA | 16 kA | 16 kA |

| | | MCCB upstream | | | | | | | |
|---|---|---|---|---|---|---|---|---|---|
| | | DPX³ 160 / DPX3 160 + RCD | | | | | | | |
| | | 25 - 36 - 50 kA | | | | | | | |
| MCB downstream | | 16 A | 25 A | 40 A | 63 A | 80 A | 100 A | 125 A | 160 A |
| DX³ 10000 A/10 kA C and D curves | ≤6 A | 25 kA | 25 kA | 25 kA | 25 kA | 25 kA | 25 kA | 25 kA | 25 kA |
| | 10 A | 25 kA | 25 kA | 25 kA | 25 kA | 25 kA | 25 kA | 25 kA | 25 kA |
| | 16 A | - | 25 kA | 25 kA | 25 kA | 25 kA | 25 kA | 25 kA | 25 kA |
| | 20 A | - | 25 kA | 25 kA | 25 kA | 25 kA | 25 kA | 25 kA | 36 kA |
| | 25 A | - | - | 25 kA | 25 kA | 25 kA | 25 kA | 25 kA | 25 kA |
| | 32 A | - | - | 25 kA | 25 kA | 25 kA | 25 kA | 25 kA | 25 kA |
| | 40 A | - | - | - | 25 kA | 25 kA | 25 kA | 25 kA | 25 kA |
| | 50 A | - | - | - | 25 kA | 25 kA | 25 kA | 25 kA | 25 kA |
| | 63 A | - | - | - | - | 25 kA | 25 kA | 25 kA | 25 kA |

All these values are also valid for circuit breakers associated to differential blocks.
According to the curves and ratings of circuit breakers, attention to the magnetic threshold and to the size of upstream circuit breakers which must necessarily be higher.

## Technical data

### Coordination between Modular Circuit-Breakers (MCB) and Moulded Case Circuit Breakers (MCCBs), three-phase network (+ neutal) 400 / 415 V± according to standard IEC/EN60947-2:

For TT or TN neutral system in 240/415 V network, to know the breaking capacity of the combination of a double pole breaker (connected between phase and neutral under 230 V) downstream of a triple-pole circuit-breaker, take the values shown in Tables 240/415 V.

| | | MCCB upstream | | | |
|---|---|---|---|---|---|
| | | DPX³ 250 / DPX³ 250 + RCD (Thermal - Magnetic & Electronic) | | | |
| | | 25 - 36 - 50 kA - 70 kA | | | |
| MCB downstream | | 100 A | 160 A | 200 A | 250 A |
| DX³ 10000 A/10 kA C and D curves | ≤6 A | 25 kA | 25 kA | 25 kA | 25 kA |
| | 10 A | 25 kA | 25 kA | 25 kA | 25 kA |
| | 16 A | 25 kA | 25 kA | 25 kA | 25 kA |
| | 20 A | 25 kA | 25 kA | 25 kA | 25 kA |
| | 25 A | 25 kA | 25 kA | 25 kA | 25 kA |
| | 32 A | 25 kA | 25 kA | 25 kA | 25 kA |
| | 40 A | 25 kA | 25 kA | 25 kA | 25 kA |
| | 50 A | 25 kA | 25 kA | 25 kA | 25 kA |
| | 63 A | 25 kA | 25 kA | 25 kA | 25 kA |

| | | MCCB upstream | | | | | | | | | | | | |
|---|---|---|---|---|---|---|---|---|---|---|---|---|---|---|
| | | DPX / H / L 250 (Thermal -Magnetic & electronic) | | | | | | DPX 400 AB | | DPX / DPXH / DPXL 630 (Thermal - Magnetic & electronic) | | | | |
| | | 36 - 70 - 100 kA | | | | | | 36 kA | | 36 - 70 - 100 kA | | | | |
| MCB downstream | | 25 A | 40 A | 63 A | 100 A | 160 A | 250 A | 320 A | 400 A | 250 A | 320 A | 400 A | 500 A | 630 A |
| DX³ 10000 A/10 kA C and D curves | ≤6 A | 25 kA | 25 kA | 25 kA | 25 kA | 25 kA | 25 kA | 25 kA | 25 kA | 25 kA | 25 kA | 25 kA | 25 kA | 25 kA |
| | 10 A | 25 kA | 25 kA | 25 kA | 25 kA | 25 kA | 25 kA | 25 kA | 25 kA | 25 kA | 25 kA | 25 kA | 25 kA | 25 kA |
| | 16 A | 25 kA | 25 kA | 25 kA | 25 kA | 25 kA | 25 kA | 25 kA | 25 kA | 25 kA | 25 kA | 25 kA | 25 kA | 25 kA |
| | 20 A | 25 kA | 25 kA | 25 kA | 25 kA | 25 kA | 25 kA | 25 kA | 25 kA | 25 kA | 25 kA | 25 kA | 25 kA | 25 kA |
| | 25 A | - | 25 kA | 25 kA | 25 kA | 25 kA | 25 kA | 25 kA | 25 kA | 25 kA | 25 kA | 25 kA | 25 kA | 25 kA |
| | 32 A | - | 25 kA | 25 kA | 25 kA | 25 kA | 25 kA | 25 kA | 25 kA | 25 kA | 25 kA | 25 kA | 25 kA | 25 kA |
| | 40 A | - | - | 25 kA | 25 kA | 25 kA | 25 kA | 20 kA | 20 kA | 20 kA | 20 kA | 20 kA | 20 kA | 20 kA |
| | 50 A | - | - | 25 kA | 25 kA | 25 kA | 25 kA | 20 kA | 20 kA | 20 kA | 20 kA | 20 kA | 20 kA | 20 kA |
| | 63 A | - | - | - | 20 kA | 20 kA | 20 kA | 20 kA | 20 kA | 20 kA | 20 kA | 20 kA | 20 kA | 20 kA |

All these values are also valid for circuit breakers associated to differential blocks.
According to the curves and ratings of circuit breakers, attention to the magnetic (or electronic) threshold and to the size of upstream circuit breakers which must necessarily be higher.

### Coordination between Modular Circuit-Breakers (MCB) and Moulded Case Circuit Breakers (MCCBs), three-phase network (+ neutal) 400 / 415 V± according to standard IEC/EN60947-2:

For TT or TN neutral system in 240/415 V network, to know the breaking capacity of the combination of a double pole breaker (connected between phase and neutral under 230 V) downstream of a triple-pole circuit-breaker, take the values shown in Tables 240/415 V.

| | | MCCB upstream | |
|---|---|---|---|
| | | DPX / H / L 1250 (Thermo-Magnetic) | DPX / H 1600 (Electronic) |
| | | 50 - 70 - 100 kA | 36 - 70 kA |
| MCB downstream | | 500 to 1250 A | 630 to 1600 A |
| DX³ 10000 A/10 kA C and D curves | ≤6 A | 25 kA | 25 kA |
| | 10 A | 25 kA | 25 kA |
| | 16 A | 25 kA | 25 kA |
| | 20 A | 25 kA | 25 kA |
| | 25 A | 20 kA | 20 kA |
| | 32 A | 16 kA | 16 kA |
| | 40 A | 16 kA | 16 kA |
| | 50 A | 16 kA | 16 kA |
| | 63 A | 16 kA | 16 kA |

All these values are also valid for circuit breakers associated to differential blocks.
According to the curves and ratings of circuit breakers, attention to the magnetic (or electronic) threshold and to the size of upstream circuit breakers which must necessarily be higher.

### Coordination between modular circuit-breakers and fuses, three-phase network (+ neutal) 230/240 V± according to standard IEC/EN 60947-2:

| | | Fuse upstream | | | | | | | | | |
|---|---|---|---|---|---|---|---|---|---|---|---|
| | | gG Type | | | | | | | | | |
| MCB downstream | | ≤20 A | 25 A | 32 A | 40 A | 50 A | 63 A | 80 A | 100 A | 125 A | 160 A |
| DX³ 10000 A/10 kA C and D curves | ≤6 A | 100 kA | 100 kA | 100 kA | 100 kA | 100 kA | 100 kA | 100 kA | 100 kA | 100 kA | 40 kA |
| | 10 A | 100 kA | 100 kA | 100 kA | 100 kA | 100 kA | 100 kA | 100 kA | 100 kA | 100 kA | 40 kA |
| | 16 A | - | 100 kA | 100 kA | 100 kA | 100 kA | 100 kA | 100 kA | 100 kA | 100 kA | 40 kA |
| | 20 A | - | - | 100 kA | 100 kA | 100 kA | 100 kA | 100 kA | 100 kA | 100 kA | 40 kA |
| | 25 A | - | - | - | 100 kA | 100 kA | 100 kA | 100 kA | 100 kA | 100 kA | 40 kA |
| | 32 A | - | - | - | - | 100 kA | 100 kA | 100 kA | 100 kA | 100 kA | 40 kA |
| | 40 A | - | - | - | - | - | 100 kA | 100 kA | 100 kA | 100 kA | 40 kA |
| | 50 A | - | - | - | - | - | - | 100 kA | 100 kA | 100 kA | 40 kA |
| | 63 A | - | - | - | - | - | - | 100 kA | 100 kA | 100 kA | 40 kA |

| | | Fuse upstream | | | | | | | | | |
|---|---|---|---|---|---|---|---|---|---|---|---|
| | | aM Type | | | | | | | | | |
| MCB downstream | | ≤20 A | 25 A | 32 A | 40 A | 50 A | 63 A | 80 A | 100 A | 125 A | 160 A |
| DX³ 10000 A/10 kA C and D curves | ≤6 A | 100 kA | 100 kA | 100 kA | 100 kA | 100 kA | 100 kA | 100 kA | 100 kA | 100 kA | 40 kA |
| | 10 A | 100 kA | 100 kA | 100 kA | 100 kA | 100 kA | 100 kA | 100 kA | 100 kA | 100 kA | 40 kA |
| | 16 A | - | 100 kA | 100 kA | 100 kA | 100 kA | 100 kA | 100 kA | 100 kA | 100 kA | 40 kA |
| | 20 A | - | - | 100 kA | 100 kA | 100 kA | 100 kA | 100 kA | 100 kA | 100 kA | 40 kA |
| | 25 A | - | - | - | 100 kA | 100 kA | 100 kA | 100 kA | 100 kA | 100 kA | 40 kA |
| | 32 A | - | - | - | - | 100 kA | 100 kA | 100 kA | 100 kA | 100 kA | 40 kA |
| | 40 A | - | - | - | - | - | 100 kA | 100 kA | 100 kA | 100 kA | 40 kA |
| | 50 A | - | - | - | - | - | - | 100 kA | 100 kA | 100 kA | 40 kA |
| | 63 A | - | - | - | - | - | - | 100 kA | 100 kA | 100 kA | 40 kA |

All these values are also valid for circuit breakers associated to differential blocks.
According to the curves and ratings of circuit breakers, attention to the threshold and to the size of upstream fuses which must necessarily be higher.

## Technical data

### Coordination between modular circuit-breakers, three-phase network (+ neutal) 230/240 V± according to IEC/EN 60947-2:

| | | MCB upstream | | | | | | | |
|---|---|---|---|---|---|---|---|---|---|
| | | DX³ 10000/16 kA | | | | | | | |
| | | B, C and D Curves | | | | | | | |
| MCB downstream | | ≤25 A | 32 A | 40 A | 50 A | 63 A | 80 A | 100 A | 125 A |
| DX³ 10000 A C Curves | ≤6 A | 32 kA | 32 kA | 25 kA | 25 kA | 25 kA | 25 kA | 25 kA | 25 kA |
| | 10 A | 32 kA | 32 kA | 25 kA | 25 kA | 25 kA | 25 kA | 25 kA | 25 kA |
| | 16 A | 32 kA | 32 kA | 25 kA | 25 kA | 25 kA | 25 kA | 25 kA | 25 kA |
| | 20 A | 32 kA | 32 kA | 25 kA | 25 kA | 25 kA | 25 kA | 25 kA | 25 kA |
| | 25 A | - | 32 kA | 25 kA | 25 kA | 25 kA | 25 kA | 25 kA | 25 kA |
| | 32 A | - | - | 25 kA | 25 kA | 25 kA | 25 kA | 25 kA | 25 kA |
| | 40 A | - | - | - | 25 kA | 25 kA | 25 kA | 25 kA | 25 kA |
| | 50 A | - | - | - | - | 25 kA | 25 kA | 25 kA | 25 kA |
| | 63 A | - | - | - | - | - | 25 kA | 25 kA | 25 kA |

| | | MCB upstream | | | | | | | |
|---|---|---|---|---|---|---|---|---|---|
| | | DX³ 25 kA | | | | | | | |
| MCB downstream | | ≤25 A | 32 A | 40 A | 50 A | 63 A | 80 A | 100 A | 125 A |
| DX³ 10000 A C Curves | ≤6 A | 50 kA | 50 kA | 25 kA | 25 kA | 25 kA | 25 kA | 25 kA | 25 kA |
| | 10 A | 50 kA | 50 kA | 25 kA | 25 kA | 25 kA | 25 kA | 25 kA | 25 kA |
| | 16 A | 50 kA | 50 kA | 25 kA | 25 kA | 25 kA | 25 kA | 25 kA | 25 kA |
| | 20 A | 50 kA | 50 kA | 25 kA | 25 kA | 25 kA | 25 kA | 25 kA | 25 kA |
| | 25 A | - | 50 kA | 25 kA | 25 kA | 25 kA | 25 kA | 25 kA | 25 kA |
| | 32 A | - | - | 25 kA | 25 kA | 25 kA | 25 kA | 25 kA | 25 kA |
| | 40 A | - | - | - | 25 kA | 25 kA | 25 kA | 25 kA | 25 kA |
| | 50 A | - | - | - | - | 25 kA | 25 kA | 25 kA | 25 kA |
| | 63 A | - | - | - | - | - | 25 kA | 25 kA | 25 kA |

All these values are also valid for circuit breakers associated to RCD add-on modules.
According to the curves and ratings of circuit breakers, attention to the magnetic threshold and to the size of upstream circuit breakers which must necessarily be higher.

### Coordination between modular circuit-breakers, three-phase network (+ neutal) 230/240 V± according to IEC/EN 60947-2:

| | | MCB upstream | | | | | | | | | | |
|---|---|---|---|---|---|---|---|---|---|---|---|---|
| | | DX³ 36 kA | | | | | | DX³ 50 kA | | | | |
| MCB downstream | | ≤25 A | 32 A | 40 A | 50 A | 63 A | 80 A | ≤25 A | 32 A | 40 A | 50 A | 63 A |
| DX³ 10000 A C Curves | ≤6 A | 50 kA | 50 kA | 50 kA | 50 kA | 50 kA | 50 kA | 50 kA | 50 kA | 50 kA | 50 kA | 50 kA |
| | 10 A | 50 kA | 50 kA | 50 kA | 50 kA | 50 kA | 50 kA | 50 kA | 50 kA | 50 kA | 50 kA | 50 kA |
| | 16 A | 50 kA | 50 kA | 50 kA | 50 kA | 50 kA | 50 kA | 50 kA | 50 kA | 50 kA | 50 kA | 50 kA |
| | 20 A | 50 kA | 50 kA | 50 kA | 50 kA | 50 kA | 50 kA | 50 kA | 50 kA | 50 kA | 50 kA | 50 kA |
| | 25 A | - | 50 kA | 50 kA | 50 kA | 50 kA | 50 kA | - | 50 kA | 50 kA | 50 kA | 50 kA |
| | 32 A | - | - | 50 kA | 50 kA | 50 kA | 50 kA | - | - | 50 kA | 50 kA | 50 kA |
| | 40 A | - | - | - | 50 kA | 50 kA | 50 kA | - | - | - | 50 kA | 50 kA |
| | 50 A | - | - | - | - | 50 kA | 50 kA | - | - | - | - | 50 kA |
| | 63 A | - | - | - | - | - | 50 kA | - | - | - | - | - |

All these values are also valid for circuit breakers associated to RCD add-on modules.
According to the curves and ratings of circuit breakers, attention to the magnetic threshold and to the size of upstream circuit breakers which must necessarily be higher.

### Coordination between Modular Circuit-Breakers (MCB) and Moulded Case Circuit Breakers (MCCBs), three-phase network (+ neutal) 230/240 V± according to standard IEC/EN 60947-2:

| | | MCCB upstream | | | | | | | |
|---|---|---|---|---|---|---|---|---|---|
| | | DPX³ 160 / DPX³ 160 + RCD | | | | | | | |
| | | 16 kA | | | | | | | |
| MCB downstream | | 16 A | 25 A | 40 A | 63 A | 80 A | 100 A | 125 A | 160 A |
| DX³ 10000 A/10 kA C and D curves | ≤6 A | 28 kA | 28 kA | 28 kA | 28 kA | 28 kA | 28 kA | 28 kA | 28 kA |
| | 10 A | 28 kA | 28 kA | 28 kA | 28 kA | 28 kA | 28 kA | 28 kA | 28 kA |
| | 16 A | - | 28 kA | 28 kA | 28 kA | 28 kA | 28 kA | 28 kA | 28 kA |
| | 20 A | - | 28 kA | 28 kA | 28 kA | 28 kA | 28 kA | 28 kA | 28 kA |
| | 25 A | - | - | 28 kA | 28 kA | 28 kA | 28 kA | 28 kA | 28 kA |
| | 32 A | - | - | 28 kA | 28 kA | 28 kA | 28 kA | 28 kA | 28 kA |
| | 40 A | - | - | - | 28 kA | 28 kA | 28 kA | 28 kA | 28 kA |
| | 50 A | - | - | - | 28 kA | 28 kA | 28 kA | 28 kA | 28 kA |
| | 63 A | - | - | - | - | 28 kA | 28 kA | 28 kA | 28 kA |

All these values are also valid for circuit breakers associated to differential blocks.
According to the curves and ratings of circuit breakers, attention to the magnetic threshold and to the size of upstream circuit breakers which must necessarily be higher.

## Technical data

### Coordination between Modular Circuit-Breakers (MCB) and Moulded Case Circuit Breakers (MCCBs), three-phase network (+ neutal) 230/240 V± according to standard IEC/EN 60947-2:

| | | MCCB upstream | | | | | | | |
|---|---|---|---|---|---|---|---|---|---|
| | | DPX³ 160 / DPX³ 160 + RCD | | | | | | | |
| | | 25 kA | | | | | | | |
| MCB downstream | | 16 A | 25 A | 40 A | 63 A | 80 A | 100 A | 125 A | 160 A |
| DX³ 10000 A/10 kA C and D curves | ≤6 A | 40 kA | 40 kA | 40 kA | 40 kA | 40 kA | 40 kA | 40 kA | 40 kA |
| | 10 A | 40 kA | 40 kA | 40 kA | 40 kA | 40 kA | 40 kA | 40 kA | 40 kA |
| | 16 A | - | 40 kA | 40 kA | 40 kA | 40 kA | 40 kA | 40 kA | 40 kA |
| | 20 A | - | 40 kA | 40 kA | 40 kA | 40 kA | 40 kA | 40 kA | 40 kA |
| | 25 A | - | - | 40 kA | 40 kA | 40 kA | 40 kA | 40 kA | 40 kA |
| | 32 A | - | - | 40 kA | 40 kA | 40 kA | 40 kA | 40 kA | 40 kA |
| | 40 A | - | - | - | 40 kA | 40 kA | 40 kA | 40 kA | 40 kA |
| | 50 A | - | - | - | 40 kA | 40 kA | 40 kA | 40 kA | 40 kA |
| | 63 A | - | - | - | - | 40 kA | 40 kA | 40 kA | 40 kA |

| | | MCCB upstream | | | | | | | |
|---|---|---|---|---|---|---|---|---|---|
| | | DPX³ 160 / DPX³ 160 + RCD | | | | | | | |
| | | 36 - 50 kA | | | | | | | |
| MCB downstream | | 16 A | 25 A | 40 A | 63 A | 80 A | 100 A | 125 A | 160 A |
| DX³ 10000 A/10 kA C and D curves | ≤6 A | 50 kA | 50 kA | 50 kA | 50 kA | 50 kA | 50 kA | 50 kA | 50 kA |
| | 10 A | 50 kA | 50 kA | 50 kA | 50 kA | 50 kA | 50 kA | 50 kA | 50 kA |
| | 16 A | - | 50 kA | 50 kA | 50 kA | 50 kA | 50 kA | 50 kA | 50 kA |
| | 20 A | - | 50 kA | 50 kA | 50 kA | 50 kA | 50 kA | 50 kA | 50 kA |
| | 25 A | - | - | 50 kA | 50 kA | 50 kA | 50 kA | 50 kA | 50 kA |
| | 32 A | - | - | 50 kA | - | 50 kA | 50 kA | 50 kA | 50 kA |
| | 40 A | - | - | - | 50 kA | 50 kA | 50 kA | 50 kA | 50 kA |
| | 50 A | | | | 50 kA | 50 kA | 50 kA | 50 kA | 50 kA |
| | 63 A | | | | | 50 kA | 50 kA | 50 kA | 50 kA |

All these values are also valid for circuit breakers associated to differential blocks.
According to the curves and ratings of circuit breakers, attention to the magnetic threshold and to the size of upstream circuit breakers which must necessarily be higher.

### Coordination between Modular Circuit-Breakers (MCB) and Moulded Case Circuit Breakers (MCCBs), three-phase network (+ neutal) 230/240 V± according to standard IEC/EN 60947-2:

| | | MCCB upstream | | | |
|---|---|---|---|---|---|
| | | DPX³ 250 / DPX³ 250+RCD (Thermal-magnetic & electronic) | | | |
| | | 25 kA | | | |
| MCB downstream | | 100 A | 160 A | 200 A | 250 A |
| DX³ 10000 A/10 kA C and D curves | ≤6 A | 40 kA | 40 kA | 40 kA | 40 kA |
| | 10 A | 40 kA | 40 kA | 40 kA | 40 kA |
| | 16 A | 40 kA | 40 kA | 40 kA | 40 kA |
| | 20 A | 40 kA | 40 kA | 40 kA | 40 kA |
| | 25 A | 40 kA | 40 kA | 40 kA | 40 kA |
| | 32 A | 40 kA | 40 kA | 40 kA | 40 kA |
| | 40 A | 40 kA | 40 kA | 40 kA | 40 kA |
| | 50 A | 40 kA | 40 kA | 40 kA | 40 kA |
| | 63 A | 40 kA | 40 kA | 40 kA | 40 kA |

All these values are also valid for circuit breakers associated to differential blocks.

## Technical data

### Coordination between Modular Circuit-Breakers (MCB) and Moulded Case Circuit Breakers (MCCBs), three phase network (+ neutal) 230/240 V± according to standard IEC/EN 60947-2:

| | | MCCB upstream | | | | | | | | | |
|---|---|---|---|---|---|---|---|---|---|---|---|
| | | DPX³ 250 / DPX³ 250 + RCD (Thermal-magnetic & electronic) | | | | DPX / H / L 250 (Thermal-magnetic & electronic) | | | | | |
| | | 36 - 50 - 70 kA | | | | 36 - 70 - 100 kA | | | | | |
| MCB downstream | | 100 A | 160 A | 200 A | 250 A | 25 A | 40 A | 63 A | 100 A | 160 A | 250 A |
| DX³ 10000 A/10 kA C and D curves | ≤6 A | 50 kA | 50 kA | 50 kA | 50 kA | 50 kA | 50 kA | 50 kA | 50 kA | 50 kA | 50 kA |
| | 10 A | 50 kA | 50 kA | 50 kA | 50 kA | 50 kA | 50 kA | 50 kA | 50 kA | 50 kA | 50 kA |
| | 16 A | 50 kA | 50 kA | 50 kA | 50 kA | 50 kA | 50 kA | 50 kA | 50 kA | 50 kA | 50 kA |
| | 20 A | 50 kA | 50 kA | 50 kA | 50 kA | 50 kA | 50 kA | 50 kA | 50 kA | 50 kA | 50 kA |
| | 25 A | 50 kA | 50 kA | 50 kA | 50 kA | - | 50 kA | 50 kA | 50 kA | 50 kA | 50 kA |
| | 32 A | 50 kA | 50 kA | 50 kA | 50 kA | - | 50 kA | 50 kA | 50 kA | 50 kA | 50 kA |
| | 40 A | 50 kA | 50 kA | 50 kA | 50 kA | - | - | 50 kA | 50 kA | 50 kA | 50 kA |
| | 50 A | 50 kA | 50 kA | 50 kA | 50 kA | - | - | 50 kA | 50 kA | 50 kA | 50 kA |
| | 63 A | 50 kA | 50 kA | 50 kA | 50 kA | - | - | - | 50 kA | 50 kA | 50 kA |

| | | MCCB upstream | | | | | | |
|---|---|---|---|---|---|---|---|---|
| | | DPX 400 AB | | DPX / DPXH / DPXL 630MT (Thermal-magnetic & electronic) | | | | |
| | | 36 kA | | 36 - 70 - 100 kA | | | | |
| MCB downstream | | 320 A | 400 A | 250 A | 320 A | 400 A | 500 A | 630 A |
| DX³ 10000 A/10 kA C and D curves | ≤6 A | 50 kA | 50 kA | 50 kA | 50 kA | 50 kA | 50 kA | 50 kA |
| | 10 A | 50 kA | 50 kA | 50 kA | 50 kA | 50 kA | 50 kA | 50 kA |
| | 16 A | 50 kA | 50 kA | 50 kA | 50 kA | 50 kA | 50 kA | 50 kA |
| | 20 A | 50 kA | 50 kA | 50 kA | 50 kA | 50 kA | 50 kA | 50 kA |
| | 25 A | 50 kA | 50 kA | 50 kA | 50 kA | 50 kA | 50 kA | 50 kA |
| | 32 A | 50 kA | 50 kA | 50 kA | 50 kA | 50 kA | 50 kA | 50 kA |
| | 40 A | 50 kA | 50 kA | 50 kA | 50 kA | 50 kA | 50 kA | 50 kA |
| | 50 A | 36 kA | 36 kA | 36 kA | 36 kA | 36 kA | 36 kA | 36 kA |
| | 63 A | 36 kA | 36 kA | 36 kA | 36 kA | 36 kA | 36 kA | 36 kA |

All these values are also valid for circuit breakers associated to differential blocks.
According to the curves and ratings of circuit breakers, attention to the magnetic (or electronic) threshold and to the size of upstream circuit breakers which must necessarily be higher.

### Coordination between Modular Circuit-Breakers(MCB) and Moulded Case Circuit Breakers (MCCBs), three phase network (+ neutal) 230/240 V± according to standard IEC/EN 60947-2:

| | | MCCB upstream | |
|---|---|---|---|
| | | DPX / H / L 1250 (Thermal-magnetic) | DPX / H 1600 (electronic) |
| | | 50 - 70 - 100 kA | 36 - 70 kA |
| MCB downstream | | 500 to 1250 A | 630 to 1600 A |
| DX³ 10000 A/10 kA C and D curves | ≤6 A | 50 kA | 50 kA |
| | 10 A | 50 kA | 50 kA |
| | 16 A | 50 kA | 50 kA |
| | 20 A | 50 kA | 50 kA |
| | 25 A | 50 kA | 50 kA |
| | 32 A | 50 kA | 50 kA |
| | 40 A | 50 kA | 50 kA |
| | 50 A | 36 kA | 36 kA |
| | 63 A | 36 kA | 36 kA |

All these values are also valid for circuit breakers associated to differential blocks.
According to the curves and ratings of circuit breakers, attention to the magnetic (or electronic) threshold and to the size of upstream circuit breakers which must necessarily be higher.

### Selectivity between two levels of protection

- The downstream circuit breaker must always have a magnetic threshold and a rated current lower than those of the upstream protection.
- Selectivity is activated total (T) if there is selectivity up to the value of breaking capacity (according to IEC / EN 60947-2) of the downstream circuit breaker.

### Selectivity between modular circuits breakers and fuses:

- Selectivity at 400 V± : values in Ampere.

| | | Fuse upstream | | | | | | | |
|---|---|---|---|---|---|---|---|---|---|
| | | gG Type | | | | | | | |
| MCB downstream | | 32 A | 40 A | 50 A | 63 A | 80 A | 100 A | 125 A | 160 A |
| DX³ 10000 A/10 kA C and D curves | ≤6 A | 1300 | 1900 | 2500 | 4000 | 4600 | 11000 | T | T |
| | 10 A | - | 1600 | 2200 | 3200 | 3600 | 7000 | 11000 | T |
| | 16 A | - | 1400 | 1800 | 2600 | 3000 | 5600 | 8000 | 15000 |
| | 20 A | - | 1200 | 1500 | 2200 | 2500 | 4600 | 6300 | 10000 |
| | 25 A | - | - | 1300 | 2000 | 2200 | 4100 | 5500 | 9000 |
| | 32 A | - | - | 1200 | 1700 | 1900 | 3500 | 4500 | 8000 |
| | 40 A | - | - | - | - | 1700 | 3000 | 4000 | 6000 |
| | 50 A | - | - | - | - | 16000 | 2600 | 3500 | 5000 |
| | 63 A | - | - | - | - | - | 2400 | 3300 | 5000 |

| | | Fuse upstream | | | | | | | | |
|---|---|---|---|---|---|---|---|---|---|---|
| | | aM Type | | | | | | | | |
| MCB downstream | | 25 A | 32 A | 40 A | 50 A | 63 A | 80 A | 100 A | 125 A | 160 A |
| DX³ 10000 A/10 kA C and D curves | ≤6 A | 1000 | 1600 | 2100 | 3200 | 6200 | 15000 | T | T | T |
| | 10 A | - | 1100 | 1700 | 2500 | 5000 | 7800 | 12000 | T | T |
| | 16 A | - | 1000 | 1400 | 2100 | 4000 | 6000 | 9000 | T | T |
| | 20 A | - | - | 1300 | 1800 | 3400 | 5100 | 7000 | 14000 | T |
| | 25 A | - | - | 1100 | 1600 | 3000 | 4500 | 6000 | 9300 | 14000 |
| | 32 A | - | - | - | 1300 | 2400 | 3800 | 5000 | 7700 | 9000 |
| | 40 A | - | - | - | - | 2100 | 3100 | 4200 | 6400 | 7000 |
| | 50 A | - | - | - | - | 2000 | 2900 | 3700 | 6000 | 6000 |
| | 63 A | - | - | - | - | - | 2800 | 3500 | 5500 | 6000 |

T = Total discrimination

## ■ Technical data

### Selectivity between modular circuits breakers:

Selectivity limit at 400 V ± : values in Ampere.

| | | MCB upstream DX³ 25 kA | | | | | | | | | | |
|---|---|---|---|---|---|---|---|---|---|---|---|---|
| MCB downstream | | 10 A | 16 A | 20 A | 25 A | 32 A | 40 A | 50 A | 63 A | 80 A | 100 A | 125 A |
| DX³ 10000 A/10 kA C and D curves | ≤6 A | 40 | 64 | 80 | 100 | 700 | 1200 | 1500 | 3000 | 4000 | T | T |
| | 10 A | - | 64 | 80 | 100 | 500 | 700 | 1000 | 1800 | 3000 | 5000 | T |
| | 16 A | - | - | 80 | 100 | 300 | 500 | 700 | 1300 | 2000 | 3600 | 5500 |
| | 20 A | - | - | - | 100 | - | 400 | 500 | 1000 | 1600 | 3000 | 4000 |
| | 25 A | - | - | - | - | - | - | 500 | 800 | 1300 | 2400 | 3300 |
| | 32 A | - | - | - | - | - | - | 500 | 600 | 1000 | 1800 | 2700 |
| | 40 A | - | - | - | - | - | - | - | 600 | 800 | 1600 | 2400 |
| | 50 A | - | - | - | - | - | - | - | - | 800 | 900 | 1700 |
| | 63 A | - | - | - | - | - | - | - | - | - | 900 | 1200 |

| | | MCB upstream DX³ 25 kA | | | | | | | | | | |
|---|---|---|---|---|---|---|---|---|---|---|---|---|
| MCB downstream | | 10 A | 16 A | 20 A | 25 A | 32 A | 40 A | 50 A | 63 A | 80 A | 100 A | 125 A |
| DX³ 10000 A/10 kA C and D curves | ≤6 A | 75 | 120 | 150 | 187 | 700 | 1200 | 1500 | 3000 | 4000 | T | T |
| | 10 A | - | 120 | 150 | 187 | 500 | 700 | 1000 | 1800 | 3000 | 5000 | T |
| | 16 A | - | - | 150 | 187 | 300 | 500 | 700 | 1300 | 2000 | 3600 | 5500 |
| | 20 A | - | - | - | 187 | 300 | 400 | 500 | 1000 | 1600 | 3000 | 4000 |
| | 25 A | - | - | - | - | 240 | 400 | 500 | 800 | 1300 | 2400 | 3300 |
| | 32 A | - | - | - | - | - | 300 | 500 | 600 | 1000 | 1800 | 2700 |
| | 40 A | - | - | - | - | - | - | 400 | 600 | 800 | 1600 | 2400 |
| | 50 A | - | - | - | - | - | - | - | 500 | 800 | 900 | 1700 |
| | 63 A | - | - | - | - | - | - | - | - | 650 | 900 | 1200 |

T = Total discrimination

### Selectivity between modular circuits breakers:

Selectivity limit at 400 V ± : values in Ampere.

| | | MCB upstream DX³ 25 kA | | | | | | | | | | |
|---|---|---|---|---|---|---|---|---|---|---|---|---|
| MCB downstream | | 10 A | 16 A | 20 A | 25 A | 32 A | 40 A | 50 A | 63 A | 80 A | 100 A | 125 A |
| DX³ 10000 A/10 kA C and D curves | ≤6 A | 120 | 192 | 240 | 500 | 700 | 1200 | 1500 | 3000 | 4000 | T | T |
| | 10 A | - | 192 | 240 | 300 | 500 | 700 | 1000 | 1800 | 3000 | 5000 | T |
| | 16 A | - | - | 240 | 300 | 384 | 500 | 700 | 1300 | 2000 | 3600 | 5500 |
| | 20 A | - | - | - | 300 | 384 | 480 | 600 | 1000 | 1600 | 3000 | 4000 |
| | 25 A | - | - | - | - | 384 | 480 | 600 | 800 | 1300 | 2400 | 3300 |
| | 32 A | - | - | - | - | - | 480 | 600 | 756 | 1100 | 1450 | 2700 |
| | 40 A | - | - | - | - | - | - | 600 | 756 | 1000 | 1250 | 2400 |
| | 50 A | - | - | - | - | - | - | - | 756 | 950 | 1200 | 1700 |
| | 63 A | - | - | - | - | - | - | - | - | 950 | 1200 | 1500 |

| | | MCB upstream DX³ 36 kA | | | | | | | | |
|---|---|---|---|---|---|---|---|---|---|---|
| MCB downstream | | 10 A | 16 A | 20 A | 25 A | 32 A | 40 A | 50 A | 63 A | 80 A |
| DX³ 10000 A/10 kA C and D curves | ≤6 A | 75 | 120 | 170 | 500 | 700 | 1200 | 1500 | 3000 | 4000 |
| | 10 A | - | 120 | 150 | 210 | 500 | 700 | 1000 | 1800 | 3000 |
| | 16 A | - | - | 150 | 187 | 300 | 500 | 700 | 1300 | 2000 |
| | 20 A | - | - | - | 187 | 300 | 400 | 500 | 1000 | 1600 |
| | 25 A | - | - | - | - | 240 | 400 | 500 | 800 | 1300 |
| | 32 A | - | - | - | - | - | 300 | 500 | 600 | 1000 |
| | 40 A | - | - | - | - | - | - | 400 | 600 | 800 |
| | 50 A | - | - | - | - | - | - | - | 500 | 800 |
| | 63 A | - | - | - | - | - | - | - | - | 650 |

T = Total discrimination

## Technical data

### Selectivity between modular circuits breakers:

Selectivity limit at 415 V ± : values in Ampere.

| | | MCB upstream DX³ 50 kA | | | | | | | |
|---|---|---|---|---|---|---|---|---|---|
| MCB downstream | | 10 A | 16 A | 20 A | 25 A | 32 A | 40 A | 50 A | 63 A |
| DX³ 10000 A/10 kA C and D curves | ≤6 A | - | 64 | 170 | 500 | 700 | 1200 | 1500 | 3000 |
| | 10 A | - | - | 150 | 210 | 500 | 700 | 1000 | 1800 |
| | 16 A | - | - | - | - | 300 | 500 | 700 | 1300 |
| | 20 A | - | - | - | - | - | 400 | 500 | 1000 |
| | 25 A | - | - | - | - | - | - | 500 | 800 |
| | 32 A | - | - | - | - | - | - | 500 | 600 |
| | 40 A | - | - | - | - | - | - | - | 600 |
| | 50 A | - | - | - | - | - | - | - | - |
| | 63 A | - | - | - | - | - | - | - | - |

| | | MCB upstream DX³ 50 kA | | | | | | | |
|---|---|---|---|---|---|---|---|---|---|
| MCB downstream | | 10 A | 16 A | 20 A | 25 A | 32 A | 40 A | 50 A | 63 A |
| DX³ 10000 A/10 kA C and D curves | ≤6 A | 75 | 120 | 170 | 500 | 700 | 1200 | 1500 | 3000 |
| | 10 A | - | 120 | 150 | 210 | 500 | 700 | 1000 | 1800 |
| | 16 A | - | - | 150 | 187 | 300 | 500 | 700 | 1300 |
| | 20 A | - | - | - | 187 | 300 | 400 | 500 | 1000 |
| | 25 A | - | - | - | - | 240 | 400 | 500 | 800 |
| | 32 A | - | - | - | - | - | 300 | 500 | 600 |
| | 40 A | - | - | - | - | - | - | 400 | 600 |
| | 50 A | - | - | - | - | - | - | - | 500 |
| | 63 A | - | - | - | - | - | - | - | - |

### Selectivity between modular circuits breakers:

Selectivity limit at 415 V ± : values in Ampere.

| | | MCB upstream DX³ 50 kA | | | | | | | |
|---|---|---|---|---|---|---|---|---|---|
| MCB downstream | | 10 A | 16 A | 20 A | 25 A | 32 A | 40 A | 50 A | 63 A |
| DX³ 10000 A/10 kA C and D curves | ≤6 A | 120 | 192 | 240 | 500 | 700 | 1200 | 1500 | 3000 |
| | 10 A | - | 192 | 240 | 300 | 500 | 700 | 1000 | 1800 |
| | 16 A | - | - | 240 | 300 | 384 | 500 | 700 | 1300 |
| | 20 A | - | - | - | 300 | 384 | 480 | 600 | 1000 |
| | 25 A | - | - | - | - | 384 | 480 | 600 | 800 |
| | 32 A | - | - | - | - | - | 480 | 600 | 756 |
| | 40 A | - | - | - | - | - | - | 600 | 756 |
| | 50 A | - | - | - | - | - | - | - | 756 |
| | 63 A | - | - | - | - | - | - | - | |

### Selectivity between modular circuits breakers (MCB) and Moulded Case Circuit Breakers (MCCBs):

Selectivity limit at 415 V ± : values in Ampere.

| | | MCCB upstream DPX³ 160 DPX³ 160 + RCD 16 - 25 - 36 - 50 kA | | | | | | | |
|---|---|---|---|---|---|---|---|---|---|
| MCB downstream | | 16 A | 25 A | 40 A | 63 A | 80 A | 100 A | 125 A | 160 A |
| DX³ 10000 A/ 10 kA C and D curves | ≤6 A | 6000 | 12000 | 12000 | T | T | T | T | T |
| | 10 A | 5000 | 7000 | 7000 | 7000 | T | T | T | T |
| | 16 A | - | 6000 | 6000 | 6000 | 6000 | T | T | T |
| | 20 A | - | 5000 | 5000 | 5000 | 5000 | 6000 | T | T |
| | 25 A | - | - | 4500 | 4500 | 4500 | 4500 | 8500 | T |
| | 32 A | - | - | - | 3000 | 4000 | 4000 | 7000 | 10000 |
| | 40 A | - | - | - | 3000 | 3000 | 3000 | 6000 | 8000 |
| | 50 A | - | - | - | - | 3000 | 3000 | 5500 | 7000 |
| | 63 A | - | - | - | - | 3000 | 3000 | 5000 | 6000 |

T = Total discrimination

### Selectivity between modular circuits breakers (MCB) and Moulded Case Circuit Breakers (MCCBs):

Selectivity limit at 415 V ± : values in Ampere.

| | | MCCB upstream | | | | | | | |
|---|---|---|---|---|---|---|---|---|---|
| | | DPX³ 250 DPX³ 250 + diff (Thermo-magnetic & electronic) 25 - 36 - 50 - 70 kA | | | | DPX 400 AB 36 kA | | DPX / H / L 1250 (Thermo-magnetic) 50 - 70 - 100 kA | DPX / H 1600 (electronic) 36 - 70 kA |
| MCB downstream | | 100 A | 160 A | 200 A | 250 A | 320 A | 400 A | 500 to 1250 A | 630 to 1600 A |
| DX³ 10000 A/10 kA C and D curves | ≤6 A | T | T | T | T | T | T | T | T |
| | 10 A | T | T | T | T | T | T | T | T |
| | 16 A | T | T | T | T | T | T | T | T |
| | 20 A | T | T | T | T | T | T | T | T |
| | 25 A | T | T | T | T | T | T | T | T |
| | 32 A | 5000 | T | T | T | T | T | T | T |
| | 40 A | 5000 | T | T | T | T | T | T | T |
| | 50 A | 4000 | T | T | T | T | T | T | T |
| | 63 A | 4000 | T | T | T | T | T | T | T |

## Technical data

### Time current characteristics for C curve

Rating - 6 to 63 A  Ref. calibration  Temp. : 30 °C
Ref. standard :  IS / IEC 60898-1

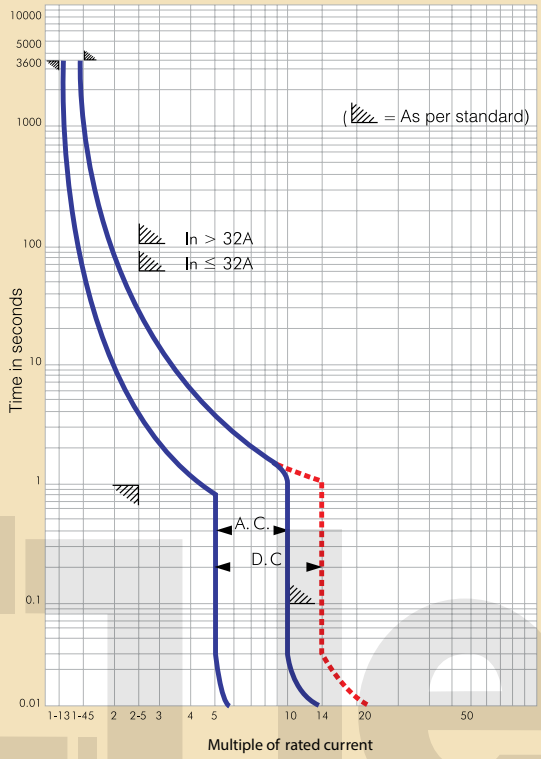


### Time current characteristics for 80-125 A

Rating - 80 A to 125 A  Ref. calibration  Temp. : 30 °C
Ref. standard :  IEC 60947-2

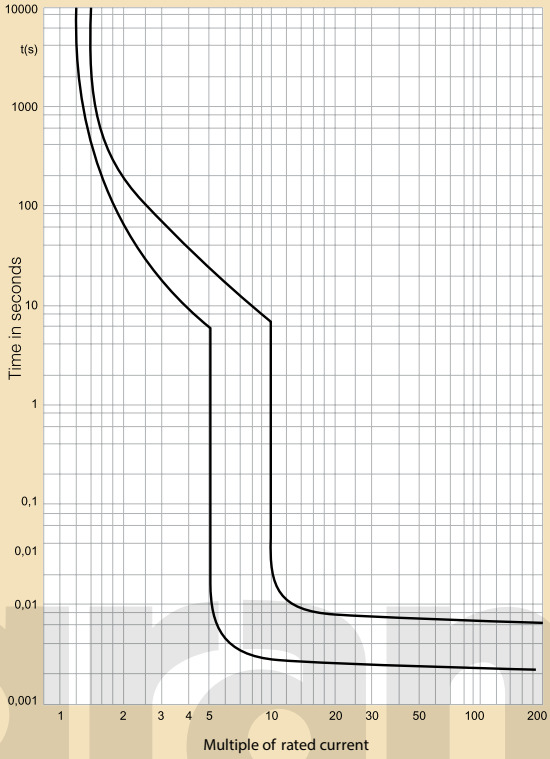


### Time current characteristics for D curve

Rating - 0.5 to 63 A  Ref. calibration  Temp. : 30 °C
Ref. standard :  IS / IEC 60898-1

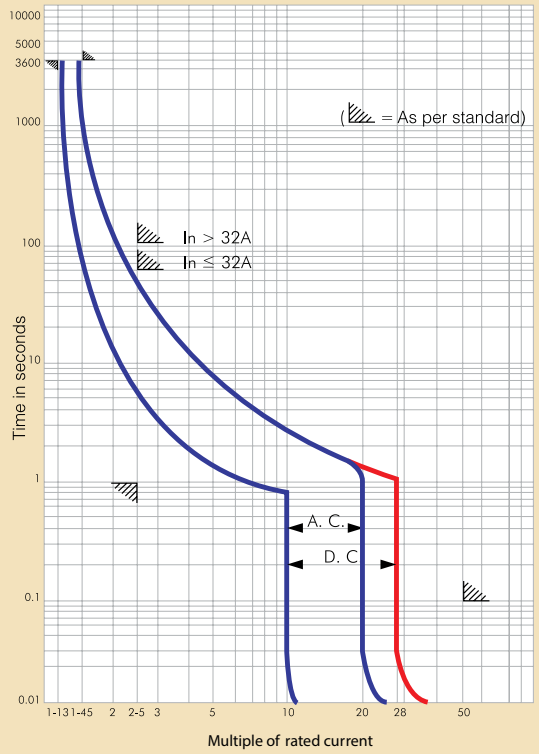

## ■ Selection chart*

DX³ MCBs (10 kA) and RCBOs 3 phase motor application

| Motor H.P. | KW | MCB rating (A) | |
|---|---|---|---|
| | | Star Delta | DOL |
| 1 | 0.75 | - | 1.6 A |
| 1.5 | 1.10 | - | 2 A |
| 2 | 1.50 | - | 3 A |
| 3 | 2.25 | - | 4 A |
| 4 | 3.00 | - | 10 A |
| 5 | 3.75 | 10 A | 10 A |
| 6 | 4.50 | 10 A | 10 A |
| 7.5 | 5.50 | 16 A | 16 A |
| 10 | 7.50 | 16 A | 20 A |
| 12.5 | 9.30 | 20 A | 25 A |
| 15 | 11.00 | 25 A | 32 A |
| 17.5 | 13.00 | 25 A | 32 A |
| 20 | 15.00 | 40 A | 40 A |
| 25 | 18.50 | 40 A | 50 A |
| 30 | 22.50 | 50 A | 63 A |
| 35 | 26.00 | 63 A | - |

**For MCB/RCBO ratings :**

Single phase = P = VI

Three phase = P = √3 VI Cos φ = 1.732 x VI x 0.8

Note : One lighting circuit can have upto 800 W or upto 10 points.
One power circuit can have upto 3000 W or upto 2 power points.
* The data given above is only for guidance.
The exact rating must be selected only after considering the motor characteristics.

## ■ Technical data

### Isolators

| | | |
|---|---|---|
| Specifications | IEC 60947-3 | |
| Number of poles | DP, TP, FP | |
| Utilization category | AC22 A | |
| Rated operational voltage and frequency | 415 V, 50/60 Hz | |
| Insulation voltage Ui | 500 V AC | |
| Impulse voltage Uimp | 6 kV | |
| Short circuit making capacity Icm | 1000 A | |
| Endurance | Electrical - 1500 operations with load AC22 A<br>Mechanical - 10000 operation | |
| Mounting position | Vertical / Horizontal / Upside down / On the side | |
| Fixing | On symmetric rail EN/IEC 60715 or DIN 35 | |
| Maximum cable size | Top/Bottom | 1 x 1.5 $mm^2$ to 35 $mm^2$ |
| | Rigid cable | 2 x 1.5 $mm^2$ to 16 $mm^2$ |
| | Top/Bottom | 1 x 1.5 $mm^2$ to 25 $mm^2$ |
| | Flexible cable | 2 x 1.5 $mm^2$ to 10 $mm^2$ |
| Applied connection torque | Recommended : 3 Nm<br>Minimum : 2 Nm Maximum: 3.5 Nm | |
| Permissible ambient temperature | Maximum + 70 °C Minimum -25 °C | |

## Dimensions

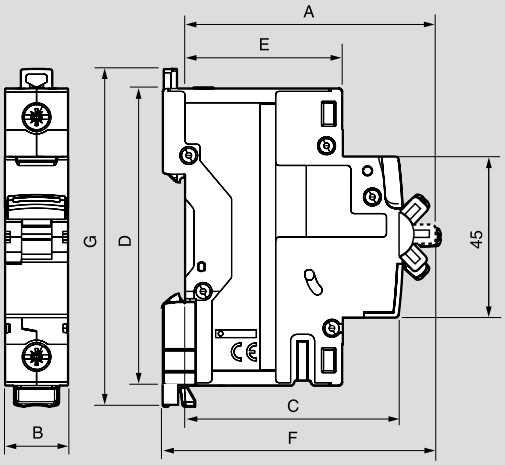


| Products | A | B | | | | | | C | D | E | F | G |
|---|---|---|---|---|---|---|---|---|---|---|---|---|
| | | SP | SPN | DP | TP | TPN | FP | | | | | |
| DX³ MCBs (0.5 to 63A) | 70 | 17.7 | 35.6 | 35.6 | 53.4 | 71.2 | 71.2 | 60 | 83 | 44 | 76 | 94 |
| DX³ MCBs (80 - 125A) | 70 | 26.7 | - | 53.4 | 80.1 | - | 106.8 | 60 | 83 | 44 | 76 | 89 |
| DX³ Isolators | 70 | - | - | 35.6 | 53.4 | - | 71.2 | 60 | 83 | 44 | 76 | 94 |
| DX³ RCCB - type AC (DP) | 70 | - | - | 35.6 | - | - | - | 60 | 83 | 44 | 76 | 94 |
| DX³ RCCB - type AC (FP) | 71.5 | - | - | - | - | - | 71.2 | 60 | 83 | 44 | 77.5 | 94 |
| DX³ RCCB - type A - S (DP) | 70 | - | - | 35.6 | - | - | - | 60 | 83 | 44 | 76 | 94 |
| DX³ RCCB - type A - S (FP) | 71.5 | - | - | - | - | - | 71.2 | 60 | 83 | 44 | 77.5 | 94 |
| DX³ RCCB - type Hpi (DP) | 70 | - | - | 35.6 | - | - | - | 60 | 83 | 44 | 76 | 94 |
| DX³ RCCB - type Hpi (FP) | 71.5 | - | - | - | - | - | 71.2 | 60 | 83 | 44 | 77.5 | 94 |
| DX³ RCBO - type AC | 70 | - | - | 71.2 | - | - | 142.4 | 60 | 83 | 44 | 76 | 94 |
| DX³ RCBO - type AC (DP 2 mod.) | 70 | - | - | 35.6 | - | - | - | 60 | 83 | 44 | 76 | 94 |
| DX³ RCBO - type Hpi (DP 2 mod.) | 70 | - | - | 35.6 | - | - | - | 60 | 83 | 44 | 76 | 94 |
| Auxiliary contacts | 70 | 8.7 | | | | | | 60 | 83 | 44 | 76 | 83 |
| Auxiliary contacts | 70 | 17.7 | | | | | | 60 | 83 | 44 | 76 | 83 |
| Shunt trip | 70 | 17.7 | | | | | | 60 | 83 | 44 | 76 | 83 |
| Minimum voltage trip | 70 | 17.7 | | | | | | 60 | 83 | 44 | 76 | 83 |
| POP over voltage | 74 | 54 | | | | | | 74 | 83 | 44 | 80.5 | 89 |
| Remote control for MCB / RCBO | 74 | 54 | | | | | | 74 | 83 | 44 | 80.5 | 89 |
| Lexic contactors 20 A | 62 | 17.8 | | | | | | 60 | 83 | 44 | 67.5 | - |
| Lexic contactors 40 A (2 mod.) | 60 | 35.6 | | | | | | 61 | 80 | 44 | 67 | - |
| Lexic contactors 40 A / 63 A (3 mod.) | 60 | 54 | | | | | | 61 | 80 | 44 | 67 | - |