DX³ RCDS

Technical data for DX³ RCDs

		RCCB		
		Type AC	**Type A-S**	**Type Hpi**
Specification		IS 12640 (part 1) 2008 IEC 61008 - 1	IEC 61008 - 1 EN 61008 - 1	EN 61008 - 1 IEC 61008 - 1
No. of modules	- Double pole	2	2	2
	- Four pole	4	4	4
Electrical characteristics				
Nominal rating In (A)	- Double pole	25, 40, 63, 80, 100	63, 80	25, 40, 63, 80
	- Four pole	25, 40, 63, 80, 100	25, 40, 63, 80	25, 40, 63, 80
Rated sensitivity (mA)	- Double pole	30, 100, 300	300	30
	- Four pole	30, 100, 300	300	30
Rated frequency (Hz)		50 / 60	50 / 60	50 / 60
Rated operating voltage	- Double pole	230	230	230
Ue (V AC)	- Four pole	230 / 415	400	400
Minimum operating voltage (V AC)		12	12	12
Minimum operating voltage for test button (V AC)[1]				
	- Double pole	170	170	170
	- Four pole	196	196	196
Rated insulation	- Double pole	250	250	250
voltage Ui (V AC)	- Four pole	500	500	500
Rated impulse withstand voltage Uimp (kV)		6	6	6
Breaking capacity		**As per IS 12640 (part 1) 2008, IEC 61008 - 1**		
Rated making & breaking capacity (Im)				
	- Up to 40 A	500 A	-	500 A
	- From 63 A and above	10 x In	630 A	630 A
Rated residual making & breaking capacity (IΔm)				
	- Up to 40 A	1000 A	-	1000 A
	- From 63 A and above	1000 A	1000 A	1000 A
Rated conditional short circuit current (Inc)		10000 A	10000 A	10000 A
Rated conditional residual short circuit current (IΔc)		10000 A	10000 A	10000 A
Rated service short circuit capacity (Ics)		-	-	-
Rated short circuit capacity (Icn)		-	-	-
Operating temperature (°C)		- 25 to 70	- 25 to 70	- 25 to 70
Endurance (0.C cycle)	- Mechanical	20,000	20,000	20,000
	- On load at in X cos φ 0.9	10,000	10,000	10,000
	- Via test button	2,000	2,000	2,000
	- By fault current (sensitivity)	2,000	2,000	2,000
Testing		By pressing test button grey dolly will come to OFF position It is recommended to test RCCB once a month	By pressing test button grey dolly will come to OFF position It is recommended to test RCCB once a month	By pressing test button, grey dolly will come to OFF position It is recommended to test RCCB once a month
Fault indication	- Earth leakage	Grey dolly will come to OFF position	Grey dolly will come to OFF position	Grey dolly will come to OFF position
	- Overload and shortcut	-	-	-
Resetting		Switch on grey dolly	Switch on grey dolly	Switch on grey dolly
Terminals	- Rigid	1 - 35 sq. mm	1 - 35 sq. mm	1 - 35 sq. mm
	- Flexible	1 - 25 sq. mm	1 - 25 sq. mm	1 - 25 sq. mm
Type of protection				
Earth leakage		•	•	•
Overload		-	-	-
Short circuit		-	-	-
Add on electrical accessories*				
Auxiliary		•	•	•
Fault signaling		•	•	•
Shunt trip		•	•	•
Under voltage		•	•	•
Over voltage		•	•	•

* - Accessories are mounted on the left hand side of the product.
At a time a maximum of three accessories can be mounted.
[1] - Between phase and neutral

	RCBO			
	Type AC	**Type AC - 2 & 4 modules**	**Type Hpi**	**Type A**
	IS 12640 (part 2) 2008 IEC 61009 - 1	NFC 61 - 410 EN 61009 - 1 IEC 61009 - 1	EN 61009 - 1 IEC 61009 - 1	EN 61009 - 1 IEC 61009 - 1
	4	2	2	-
	7	4	-	4
	6, 10, 16, 25, 32, 40, 63	6, 10, 16, 20, 25, 32	25, 32, 40	25, 32, 40
	16, 25, 32, 40, 63	10, 16, 20, 25, 32	-	-
	30, 100, 300	30, 300	30	30, 300
	30, 100, 300	-	-	-
	50	50	50 / 60	50 / 60
	230	230	230	-
	415	415	-	415
	12	12	12	12
	170	170	170	-
	196	196	-	196
	500	250	250	-
	500	500	-	500
	4	6	6	6
	As per IS 12640 (part 2) 2008, IEC 61009 - 1			
	10000 A	6000 A	6000 A	6000 A
	10000 A	-	-	-
	10000 A	3000 A	3000 A	3000 A
	10000 A	-	-	-
	-	-	-	-
	-	-	-	-
	7500 A	6000 A	6000 A	6000 A
	10000 A	6000 A	6000 A	6000 A
	- 25 to 70	- 25 to 70	- 25 to 70	- 25 to 70
	20,000	20,000	20,000	20,000
	10,000	10,000	10,000	10,000
	1,000	1,000	1,000	1,000
	1,000	1,000	1,000	1,000
	By pressing test button, black dolly will come to OFF position It is recommended to test RCBO once a month	By pressing test button, black dolly will come to OFF position It is recommended to test RCBO once a month	By pressing test button, black dolly will come to OFF position It is recommended to test RCBO once a month	By pressing test button, black dolly will come to OFF position It is recommended to test RCBO once a month
	Black & blue dolly will come to OFF position	Black dolly will come to OFF position & blue indicator will appear on front face window	Black dolly will come to OFF position & blue indicator will appear on front face window	Black dolly will come to OFF position & blue indicator will appear on front face window
	Black dolly will come to OFF position	Black dolly will come to OFF position	Black dolly will come to OFF position	Black dolly will come to OFF position
	Switch on black dolly	Switch on black dolly	Switch on black dolly	Switch on black dolly
	1 - 35 sq. mm	0.75 - 16 sq. mm	0.75 - 16 sq. mm	0.75 - 16 sq. mm
	1 - 25 sq. mm	0.75 - 10 sq. mm	0.75 - 10 sq. mm	0.75 - 10 sq. mm
	•	•	•	•
	•	•	•	•
	•	•	•	•
	•	•	•	•
	•	•	•	•
	•	•	•	•
	•	•	•	•
	•	•	•	•

Dimensions

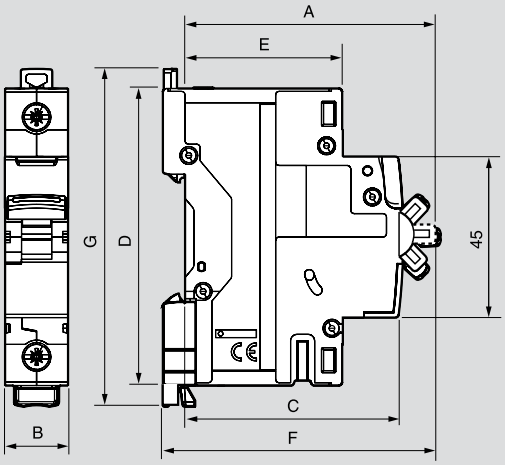

Products	A	B						C	D	E	F	G
		SP	SPN	DP	TP	TPN	FP					
DX³ MCBs (0.5 to 63A)	70	17.7	35.6	35.6	53.4	71.2	71.2	60	83	44	76	94
DX³ MCBs (80 - 125A)	70	26.7	-	53.4	80.1	-	106.8	60	83	44	76	89
DX³ Isolators	70	-	-	35.6	53.4	-	71.2	60	83	44	76	94
DX³ RCCB - type AC (DP)	70	-	-	35.6	-	-	-	60	83	44	76	94
DX³ RCCB - type AC (FP)	71.5	-	-	-	-	-	71.2	60	83	44	77.5	94
DX³ RCCB - type A - S (DP)	70	-	-	35.6	-	-	-	60	83	44	76	94
DX³ RCCB - type A - S (FP)	71.5	-	-	-	-	-	71.2	60	83	44	77.5	94
DX³ RCCB - type Hpi (DP)	70	-	-	35.6	-	-	-	60	83	44	76	94
DX³ RCCB - type Hpi (FP)	71.5	-	-	-	-	-	71.2	60	83	44	77.5	94
DX³ RCBO - type AC	70	-	-	71.2	-	-	142.4	60	83	44	76	94
DX³ RCBO - type AC (DP 2 mod.)	70	-	-	35.6	-	-	-	60	83	44	76	94
DX³ RCBO - type Hpi (DP 2 mod.)	70	-	-	35.6	-	-	-	60	83	44	76	94
Auxiliary contacts	70	8.7						60	83	44	76	83
Auxiliary contacts	70	17.7						60	83	44	76	83
Shunt trip	70	17.7						60	83	44	76	83
Minimum voltage trip	70	17.7						60	83	44	76	83
POP over voltage	74	54						74	83	44	80.5	89
Remote control for MCB / RCBO	74	54						74	83	44	80.5	89
Lexic contactors 20 A	62	17.8						60	83	44	67.5	-
Lexic contactors 40 A (2 mod.)	60	35.6						61	80	44	67	-
Lexic contactors 40 A / 63 A (3 mod.)	60	54						61	80	44	67	-