SIEMENS

Data sheet 3TY7561-1AA00

Auxiliary switch block for size 2...14 1st auxiliary switch block left or right

General technical data	
Suitability for use	Contactor relay and power contactor
Protection class IP on the front	IP20
Ambient temperature	
• during storage	-55 ... +80 °C
• during operation	-25 ... +55 °C
Mechanical service life (switching cycles) typical	10 000 000
Insulation voltage with degree of pollution 3 at AC rated value	690 V
Surge voltage resistance rated value	6 kV

Auxiliary circuit	
Number of NC contacts for auxiliary contacts	
• instantaneous contact	1
• lagging switching	0
Number of NO contacts for auxiliary contacts	
• instantaneous contact	1
• leading contact	0
Operating current of auxiliary contacts at AC-12	

Subject to change without notice
© Copyright Siemens

• at 24 V	10 A
• at 230 V	10 A
• maximum	10 A
Operating current	
• of auxiliary contacts	
— at AC-14	
— at 125 V	10 A
— at AC-15	
— at 24 V	10 A
— at 230 V	5.6 A
— at 400 V	3.6 A
• at AC-15 at 690 V rated value	2.3 A
Operating current	
• of auxiliary contacts at DC-12	
— at 24 V	10 A
— at 110 V	3.2 A
— at 220 V	0.9 A
Operating current	
• of auxiliary contacts at DC-13	
— at 24 V	10 A
— at 60 V	5 A
— at 110 V	1.14 A
— at 220 V	0.48 A

Installation/ mounting/ dimensions

Mounting type	snap-on mounting
Width	12 mm
Height	70 mm
Depth	51.5 mm

Connections/ Terminals

Type of electrical connection for auxiliary and control current circuit	screw-type terminals
Type of connectable conductor cross-sections	
• for auxiliary contacts	
— finely stranded	
— with core end processing	2x (0.5 ... 1.0 mm²), 2x (0.75 ... 2.5 mm²)
• at AWG conductors for auxiliary contacts	2x (18 ... 12)

Safety related data

Product function positively driven operation acc. to IEC 60947-5-1	Yes

Certificates/ approvals

Subject to change without notice
© Copyright Siemens

General Product Approval					Functional Safety/Safety of Machinery
CCC	CSA	UL	KC	EAC	Type Examination Certificate

Test Certificates	other
Special Test Certificate	Confirmation

Further information

Information- and Downloadcenter (Catalogs, Brochures,…)
https://www.siemens.com/ic10

Industry Mall (Online ordering system)
https://mall.industry.siemens.com/mall/en/en/Catalog/product?mlfb=3TY7561-1AA00

Cax online generator
http://support.automation.siemens.com/WW/CAXorder/default.aspx?lang=en&mlfb=3TY7561-1AA00

Service&Support (Manuals, Certificates, Characteristics, FAQs,...)
https://support.industry.siemens.com/cs/ww/en/ps/3TY7561-1AA00

Image database (product images, 2D dimension drawings, 3D models, device circuit diagrams, EPLAN macros, ...)
http://www.automation.siemens.com/bilddb/cax_de.aspx?mlfb=3TY7561-1AA00&lang=en

Subject to change without notice
© Copyright Siemens

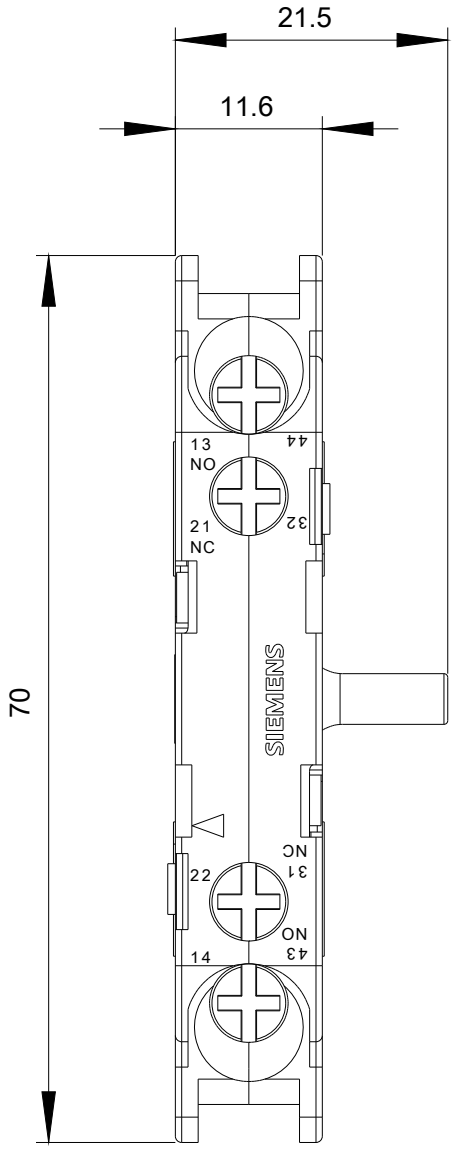

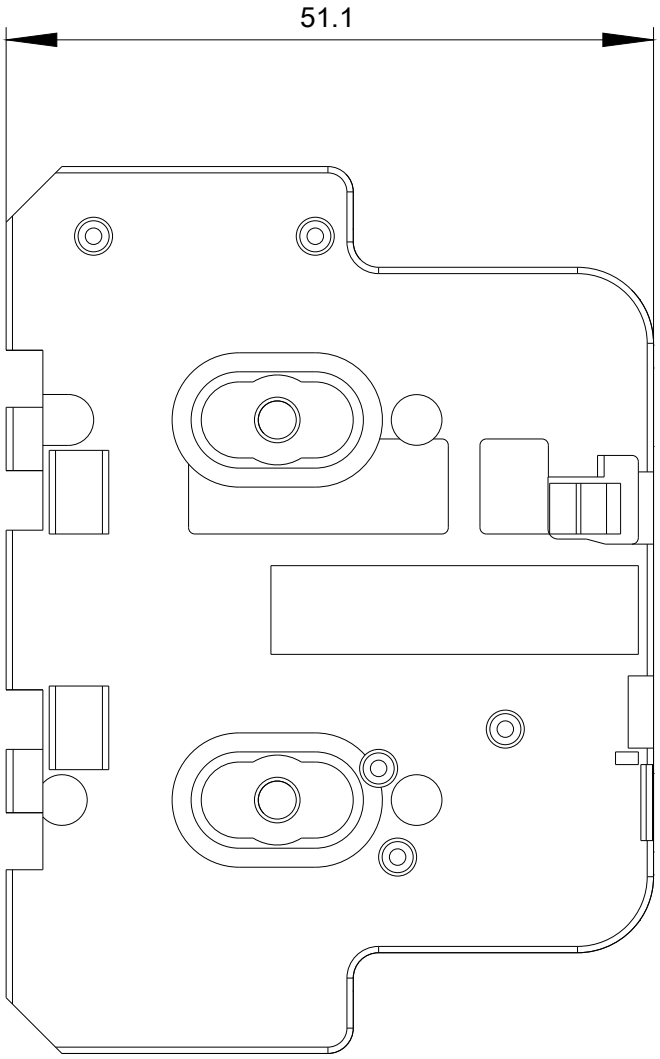

last modified: 04/02/2020

Subject to change without notice
© Copyright Siemens